Screw Pumps

Series SM

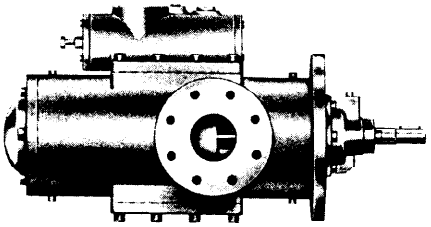

SMF

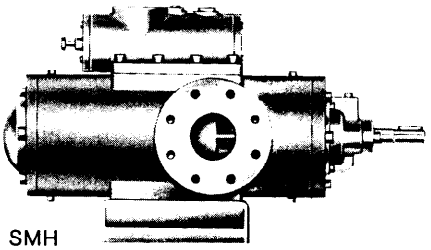

SMH

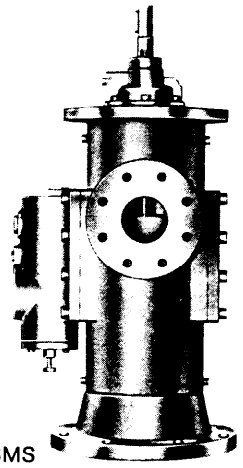

SMS

Application
For handling lubricating fluids. The fluids to be pumped must not contain any abrasive substances nor chemically attack the pump materials.

Main fields of application
Fuel oil firing/energy engineering:
For handling light and heavy fuel oils as well as residual and waste oils, e.g. as fuel oil, transfer, fuelling, ring-conduit, burner-operation and injection pumps (gas turbines).

Hydraulics:
For booster and/or pumping hydraulic oils on mineral-oil basis or hydraulic lubricating liquids; e.g. as hydraulic pumps for lifts, elevating platforms, pusher centrifuges, hydraulic presses, forging hammers, bale presses, chip-board presses, winches, hoists, variable-pitch propeller and rudder adjusting units, hatch hydraulics, rolling mill and machine tool hydraulics.

General industrial engineering/machine/heavy machine industry:
For handling lubricating, cooling, coolant, sealing, regulating and hydraulic oils, light and heavy fuel oils, Diesel oils, fuels and thermal oils (cold), e.g. for steam, gas and water turbines as sealing, regulating oil and jacking oil pumps, for compressors as sealing and coolant oil pumps, for Diesel engines as cooling oil as well as fuel pumps, for rolling mills as hydraulic pumps etc.

Marine/Offshore engineering:
For handling lubricating, cooling and hydraulic oils, light and heavy fuel oils, crude oils as well as fuels.

Machine-tool industry:
For handling cutting, grinding, deep-hole drilling oils and oil-in-water emulsions as well as hydraulic oils.

Tank farms:
For handling all lubricating fluids such as greases, oils, paints, fuels, polyols, isocyanates; e.g. as loading or unloading pumps.

Printing industry:
For handling gravure inks.

Chemical and petro-chemical as well as processing industry:
For handling all lubricating fluids such as oils (including crude oils), greases, paint, lacquers, ointments, pastes, polyols, isocyanates, tar, bitumen, glycerin, glues, adhesive substances, resins, paraffins, waxes, water glass and also as pipeline pumps.

Paint/lacquer industry:
For handling paints, lacquers, resins, oil varnish and linseed oils.

Washing/cleansing agent industry:
For handling oils, greases, soaps and additives.

Paper/pulp industry:
For handling viscose and pulp.

Food industry:
For handling molasses, glucose, sirup and vegetable oils.

Design
Self-priming three-screw pump.

The hardened and ground spindles run in a replaceable casing insert.

The axial thrust acting on the flanks of the screw threads is compensated by balance pistons which – with all three spindles – are arranged in the delivery chamber.

The idler spindles are turned hydraulically. The thread flanks merely transmit the torque resulting from the liquid friction and are consequently practically free of stress and not subject to any wear.

A groove ball bearing lubricated by the fluid to be pumped (with internal bearing design) respectively an external, grease lubricated groove ball bearing serves for fixing the driving spindle.

A stuffing box or two shaft sealing rings or a maintenance-free unbalanced mechanical seal as required is used as shaft sealing. By means of a return pipe, the sealing chamber is connected with the suction chamber. Therefore, irrespectively of the delivery pressure, only the suction/inlet pressure always becomes effective at the shaft sealing.

Function
Owing to a special profiling of the flanks of the screw threads, the three spindles form sealed chambers, the contents of which are axially and completely continuously shifted from the suction to the delivery side of the pump. There is no turbulence despite the rotational movement, and squeezing stresses are avoided by the constant volume in the chambers.

Noise/pulsation
The structural design and mode of operation of the screw pump ensure a very low noise level and a nearly pulsation-free delivery.

Performance data
A preliminary pump selection can be effected by means of the performance tables (pages 6 to 13). For the exact performance data as a function of the viscosity of the fluid to be pumped and the pump speed, please refer to the individual characteristics.

Speed of rotation
Based on the small dimensions of the rotating screw spindles and according to pump size and design rotational speeds up to 11 000 1/min are possible. With very high speeds respectively for determining the speed limit the suction/inlet pressure conditions, the design of the shaft sealing and of the bearing as well as the running speed of the thread flanks have to be considered.

Temperature and pressure limits

admissible temperature of fluid to be pumped

with stuffing box, design U2 and KA2	200 °C
with shaft sealing rings, design U3 and U4	80 °C
with mechanical seal, design U...	150 °C ①
design D...	80 °C
design E...	80-150 °C ①

admissible suction lift
see NPSH values, page 5

admissible pump outlet pressure ②

with pump casing in c.i. (GG-25)	55 bar
in s.g.c.i. (GGG-40)	90/100 bar ③
in fabricated steel	120 bar

admissible supply pressure

with stuffing box, design U2 and KA2	3,0 bar ④
with shaft sealing rings, design U3 and U4	1,5 bar ④
with unbalanced mechanical seal design U..., D... and E...	7,0 bar ④

① with higher temperatures inquiry of our works necessary
② for the attainable delivery pressure as a function of viscosity and speed, please refer to the individual characteristics.
For delivery pressures up to 250 bar, please refer to series VH (pamphlet VM 537 GB/...)
③ 90 bar with pump sizes 280 to 1300, 100 bar with pump sizes 40 to 210
④ with higher supply pressures inquiry at our works necessary.

The pump sizes 1700 and 2200 as well as all pump sizes with outlet pressure exceeding 90/100 bar will be supplied in fabricated steel design. Dimension and sectional drawings are not included in this pamphlet and must be demanded separately.

Shaft sealing

Pump size	Stuffing box ⑤ with ... bearing		Shaft seal rings ⑥		Mechanical seal ⑦ with ... bearing		
	internal	external	2 pcs.	3 pcs.	inter.	external	
SM	U2	KA2	U3	U4	U...	D...	E...
40...2200	x	x	x	x	x	x	x

⑤ with graphite-incorporated PTFE packing
⑥ made of NBR (buna N) resp. FPM (Viton) (Viton at surplus price)
⑦ uncooled, maintenance-free mechanical seal of the unbalanced type

Materials ... 12.1 (BRVGG) ⑧

Rotary seal ring:	Carbon, resin-impregnated
Stationary seal ring:	Ni-Resist
Auxiliary sealings:	FPM (Viton)
Spring:	CrNiMo steel
Metal parts:	CrNiMo steel

An incorporated control valve serves for a slight excess pressure within the area of the shaft sealing. As a result hereof, during suction operation, air intake through the shaft sealing is avoided an dry operation of the shaft sealing prevented. The design KA2 has no control valve and therefore should not be used for suction operation.

⑧ Special mechanical seals and/or other material designs upon inquiry.

Bearing

In an internal groove ball bearing.

Design U...: the groove ball bearing is lubricated by the fluid to be pumped.

In an external, grease lubricated groove ball bearing.

Design D, KA: no grease nipple, groove ball bearing in closed design with lifetime grease filling.

Design E: with grease nipple. A grease volume control (labyrinth ring) prevents overgreasing of the bearing and thus excessive heating up to the bearing.

Branch position/flanges

SMH, SMF, SMS: suction and delivery branch arranged on centerline of pump and opposed out-of-line. The sense of flow may be changed without alteration of sense of rotation by turning the pump casing by 180°.

Flanges with all designs

Suction side:	PN 16 according to DIN EN 1092-2
Delivery side:	PN 100 according to DIN 2547

Heating

For heating of pump, for instance when pumping heavy fuel oil or other pumping liquids which solidify when getting cool, the following heating devices are available:

Series	Heating			
	electrical	with steam or heat conveyor		
	heating elements	heating cover	heating cartridges	jacketed casing ⑨
SMH	x	x		x
SMF	x	x		x
SMS	x		x	x

⑨ Pumps with jacketed casing can only be supplied in fabricated steel design (special technical documentation).

For further details of pump heating please refer to page 26.

Material

Part-No.	Denomination	Material design W2	W3	W12 ⑩
1	Pump casing	c.i. (GG-25)	s.g.c.i. (GGG-40)	fabricated steel
2	Pump casing insert	silafont	silafont	silafont
3	Pump cover, drive side	c.i. (GG-25)	c.i. (GG-25)	c.i. (GG-25)
4	Pump cover, non-drive side	c.i. (GG-25)	c.i. (GG-25)	fabricated steel
4	Round pump foot (only with series SMS)	c.i. (GG-25)	c.i. (GG-25)	fabricated steel
5	Bearing housing (only with external bearing)	c.i. (GG-25)	c.i. (GG-25)	c.i. (GG-25)
5	Shaft sealing housing (only with internal bearing)	c.i. (GG-25)	c.i. (GG-25)	c.i. (GG-25)
6	Pump foot	c.i. (GG-25)	c.i. (GG-25)	fabricated steel
7	Pump casing cover	c.i. (GG-25)	c.i. (GG-25)	c.i. (GG-25)
8	Balance bush	silafont	silafont	silafont
9	Seal cover	c.i. (GG-25)	c.i. (GG-25)	c.i. (GG-25)
9	Gland (only with design U2 and KA2)	c.i. (GG-25)	c.i. (GG-25)	c.i. (GG-25)
12	Driving spindle	nitride steel	nitride steel	nitride steel
13	Idler spindle	nitride steel	nitride steel	nitride steel

⑩ For pumps in fabricated steel design (pump sizes 1700 and 2200 as well as pumps with outlet pressures exceeding 90/100 bar and/or because of customers' specific demands) separate technical documention is available.

Abbreviations

SM H 40 E R 46 U 2 E - W2

Series

Type

Design
- H = horizontal foot mounted pump
- E = cartridge unit pump for H-pump
- F = flange mounted pump
- S = vertical pedestal mounted pump
- EF = cartridge unit pump for F- and S-pump

Size
= theoretic delivery flow [l/min] with normal pitch and n = 1450 1/min

Design of driving spindle

Direction of screw pitch
- R = right-hand (standard design)
- L = left-hand (only upon request)

Screw pitch angle (degrees)

Structural feature
- U = internal ball bearing, shaft sealing uncooled/unheated
- KA = external ball bearing, stuffing box uncooled/unheated
- D = external ball bearing, mechanical seal uncooled/unheated
- E = external ball bearing with grease nipple, mechanical seal uncooled/unheated

Shaft sealing
- 2 = stuffing box, built-in with structural feature U and KA
- 3 = two shaft sealing rings, built-in with structural feature U
- 4 = three shaft sealing rings, built-in with structural feature U
- 6.7 = mechanical seal, built-in with structural feature E
- 12.1 = mechanical seal, built-in with structural feature U and D

Heating of casing
- E = heating elements, electric
- P = heating cartridge for steam or heat conveyors
- X = heating cover for steam or heat conveyors
- Y = jacketed casing for steam or heat conveyors (special technical documentation)

Material design
- W2 = pump casing c.i. (GG), casing insert silafont
- W3 = pump casing s.g.c.i. (GGG), casing insert silafont
- W12 = pump casing fabricated steel, casing insert silafont

Pressure relief valves
All pumps can be supplied with built-on pressure relief valve. For allocation, dimensions and connections please refer to page 27.

Valve characteristics and sectional drawings are not included within this pamphlet and must be demanded separately.

In case pumps without built-on pressure relief valve are required, an overload protection must be provided in the control system or as a pipeline pressure relief valve.

For allocation, dimensions and connections of pressure relief valves for pipeline installation please refer to page 28.

Shaft coupling and protection against accidental contact
Shaft coupling according to DIN 740.

A protection according to DIN 24295 against accidental contact also is supplied as soon as the scope of supply includes pump, base plate and shaft coupling or when an intermediate bracket, respectively bracket with feet is included in the delivery volume.

Drive
The pumps will be coupled either directly (Series SMH) or by means of an intermediate bracket (Series SMS), respectively of a bracket with feet for floor or wall mounting (Series SMF) with electric motors of the most varied kinds or with other driving engines.

In most cases, surface cooled, three phase A.C. short circuit motors, construction B3 or V1 are provided; enclosure IP54 according to IEC Standard, class B insulation, motor windings for 400 V△, 50 or 60 Hz.

Unit-assembly principle
Three-screw pumps, SM series.
Same delivery elements with different types of casing construction.

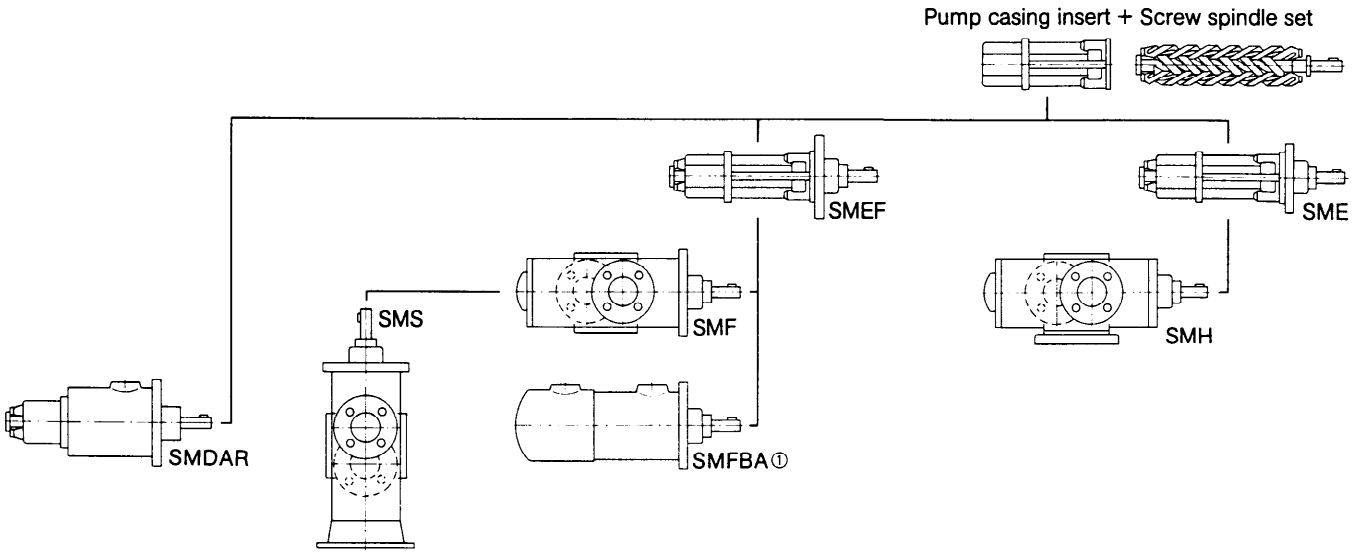

① For series SMFBA refer to pamphlet VM 664 GB/...

Performance survey
For nominal pump outputs not covered by the type SM further pump series of single entry three-screw pumps are available according to the following survey (stated performances refer to 50 Hz speeds).

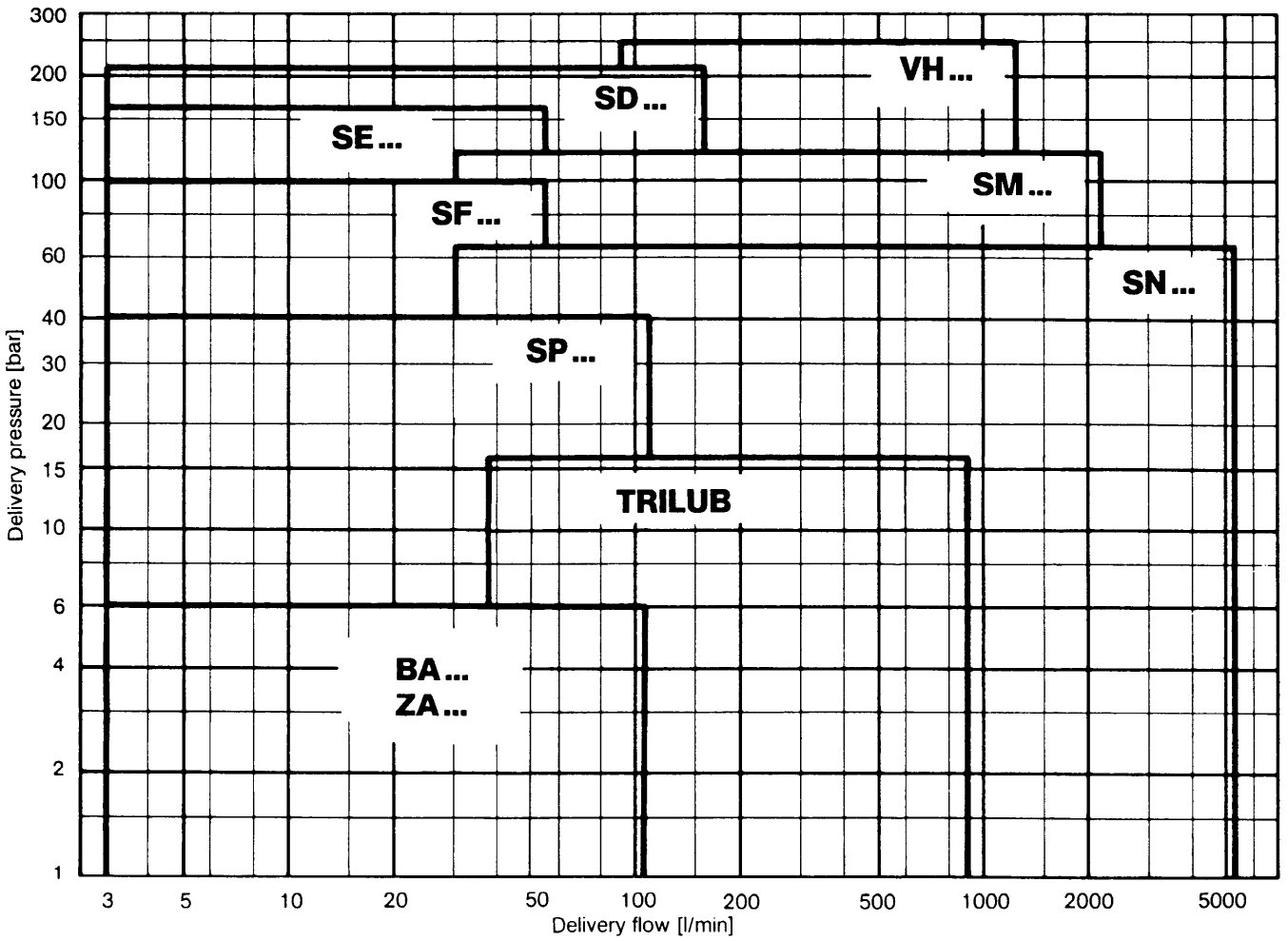

NPSH req. (m)

The values as indicated apply to airless fluids to be pumped (a safety allowances of 0.5 m is already included). In case of fluids to be pumped with air pockets (unsolved air), either the pump must be adapted or allowances on the stated NPSH values are necessary. For these purposes, by all means inquire at our works.

For exact NPSH values in dependence of the viscosity (also for other viscosities than those mentioned below) and of the pump rotational speed (also for other speeds of rotation than those mentioned below), please refer to the individual NPSH graphs.

Pump size	Kinematic viscosity ν											
	6 mm^2/s				40 mm^2/s				380 mm^2/s			
	Speed n [1/min]				Speed n [1/min]				Speed n [1/min]			
	1450	1750	2900	3500	1450	1750	2900	3500	1450	1750	2900	3500
SM...	m	m	m	m	m	m	m	m	m	m	m	m
40-38	3,0	3,0	3,0	3,0	3,0	3,0	3,0	3,0	3,0	3,0	3,0	3,3
40-46	3,0	3,0	3,0	3,0	3,0	3,0	3,0	3,0	3,0	3,0	3,5	4,5
80-36	3,0	3,0	3,0	3,0	3,0	3,0	3,0	3,0	3,0	3,0	3,1	3,7
80-42	3,0	3,0	3,0	3,0	3,0	3,0	3,0	3,1	3,0	3,0	3,8	4,8
80-46	3,0	3,0	3,0	3,3	3,0	3,0	3,0	3,8	3,0	3,0	4,6	6,3
120-42	3,0	3,0	3,0	3,0	3,0	3,0	3,0	3,6	3,0	3,0	4,4	5,8
120-46	3,0	3,0	3,0	3,8	3,0	3,0	3,4	4,5	3,0	3,0	5,4	7,6
210-40	3,0	3,0	3,0	3,6	3,0	3,0	3,2	4,2	3,0	3,0	5,2	7,0
210-46	3,0	3,0	3,8	5,0	3,0	3,0	4,5	6,0	3,0	3,5	7,5	①
280-43	3,0	3,0	3,7	4,8	3,0	3,0	4,3	5,8	3,0	3,6	7,3	①
280-46	3,0	3,0	4,5	6,1	3,0	3,0	5,3	7,5	3,3	4,1	①	①
440-40	3,0	3,0	3,8	5,2	3,0	3,0	4,6	6,4	3,1	3,8	7,8	①
440-46	3,0	3,0	5,7	8,1	3,0	3,2	6,9	①	3,8	5,0	①	①
660-40	3,0	3,0	5,1	7,2	3,0	3,0	6,1	8,7	3,6	4,7	①	①
660-46	3,0	3,4	7,5	–	3,1	3,9	①	–	4,6	6,5	①	–
940-42	3,0	3,1	6,8	–	3,0	3,6	8,0	–	4,4	5,8	①	–
940-46	3,0	3,4	①	–	3,5	4,6	①	–	5,6	7,9	①	–
1300-42	3,0	3,6	8,3	–	3,3	4,2	①	–	5,2	7,2	①	–
1300-46	3,4	4,6	–	–	4,0	5,4	–	–	7,6	①	–	–
1700-42	3,2	4,3	–	–	3,8	5,0	–	–	6,1	8,5	–	–
1700-46	3,4	5,4	–	–	4,6	6,6	–	–	7,9	①	–	–
2200-42	3,7	4,9	–	–	4,4	6,0	–	–	7,3	①	–	–
2200-46	4,2	6,3	–	–	5,3	7,6	–	–	①	①	–	–

① Inlet pressure necessary

Performance table Delivery flow Q [l/min] and power absorbed P [kW]

Pump size	Delivery pressure	n = 1450 1/min				n = 2900 1/min			
		ν = 6 mm ²/s		ν = 40 mm ²/s		ν = 6 mm ²/s		ν = 40 mm ²/s	
SM...	Δp bar	Q l/min	P kW	Q l/min	P kW	Q l/min	P kW	Q l/min	P kW
40-38	20	24,50	1,27	28,70	1,27	56,50	2,34	60,60	2,34
	30	21,50	1,81	27,40	1,81	53,40	3,40	59,30	3,40
	40	18,60	2,34	26,10	2,34	50,50	4,47	58,00	4,47
	50	15,80	2,87	24,90	2,87	47,80	5,53	56,80	5,53
	60	13,10	3,40	23,70	3,40	45,10	6,60	55,60	6,60
	70	-	-	22,50	3,94	42,40	7,66	54,40	7,66
	80	-	-	21,40	4,47	39,80	8,72	53,30	8,72
	90	-	-	20,30	5,00	-	-	52,20	9,79
	100	-	-	19,20	5,53	-	-	51,10	10,90
	110	-	-	18,10	6,06	-	-	50,00	11,90
	120	-	-	-	-	-	-	49,00	13,00
40-46	20	33,60	1,63	38,60	1,63	76,10	3,68	81,20	3,68
	30	29,80	2,34	37,00	2,34	72,40	5,10	79,50	5,10
	40	26,30	3,05	35,40	3,05	68,90	6,52	78,00	6,52
	50	-	-	33,90	3,76	65,50	7,94	76,50	7,94
	60	-	-	32,50	4,47	62,20	9,35	75,10	9,35
	70	-	-	31,10	5,18	-	-	73,60	10,80
	80	-	-	29,70	5,89	-	-	72,30	12,20
	90	-	-	-	-	-	-	70,90	13,60
	100	-	-	-	-	-	-	69,60	15,00
	110	-	-	-	-	-	-	68,30	16,40
	120	-	-	-	-	-	-	67,00	17,90
80-36	20	46,10	2,27	53,00	2,27	104,00	5,20	111,00	5,20
	30	41,20	3,24	50,80	3,24	99,40	7,14	109,00	7,14
	40	36,40	4,21	48,80	4,21	94,60	9,08	107,00	9,08
	50	31,90	5,18	46,80	5,18	90,10	11,00	105,00	11,00
	60	27,50	6,15	44,90	6,15	85,70	13,00	103,00	13,00
	70	-	-	43,00	7,12	81,40	14,90	101,00	14,90
	80	-	-	41,20	8,09	77,20	16,80	99,40	16,80
	90	-	-	39,40	9,06	73,00	18,80	97,60	18,80
	100	-	-	37,70	10,00	-	-	95,90	20,70
	110	-	-	35,90	11,00	-	-	94,10	22,70
	120	-	-	34,20	12,00	-	-	92,40	24,60
80-42	20	55,90	2,69	64,20	2,69	127,00	6,03	135,00	6,03
	30	49,80	3,86	61,50	3,86	120,00	8,39	132,00	8,39
	40	44,00	5,04	59,00	5,04	115,00	10,70	130,00	10,70
	50	38,50	6,22	56,50	6,22	109,00	13,10	127,00	13,10
	60	-	-	54,20	7,40	104,00	15,50	125,00	15,50
	70	-	-	51,90	8,58	98,50	17,80	123,00	17,80
	80	-	-	49,60	9,75	-	-	120,00	20,20
	90	-	-	47,40	10,90	-	-	118,00	22,50
	100	-	-	45,20	12,10	-	-	116,00	24,90
	110	-	-	-	-	-	-	114,00	27,20
	120	-	-	-	-	-	-	112,00	29,60
80-46	20	68,40	3,10	76,70	3,10	152,00	6,86	160,00	6,86
	30	62,30	4,49	74,00	4,49	145,00	9,64	157,00	9,64
	40	56,50	5,87	71,50	5,87	140,00	12,40	155,00	12,40
	50	-	-	69,00	7,26	134,00	15,20	152,00	15,20
	60	-	-	66,60	8,65	129,00	18,00	150,00	18,00
	70	-	-	64,30	10,00	-	-	147,00	20,70
	80	-	-	62,10	11,40	-	-	145,00	23,50
	90	-	-	-	-	-	-	143,00	26,30
	100	-	-	-	-	-	-	141,00	29,00
	110	-	-	-	-	-	-	139,00	31,80
	120	-	-	-	-	-	-	137,00	34,60
120-42	20	80,90	3,85	91,70	3,85	181,00	8,74	192,00	8,74
	30	73,00	5,52	88,30	5,52	173,00	12,10	188,00	12,10
	40	65,50	7,18	85,00	7,18	166,00	15,40	185,00	15,40
	50	58,30	8,85	81,90	8,85	158,00	18,70	182,00	18,70
	60	-	-	78,90	10,50	151,00	22,10	179,00	22,10
	70	-	-	75,90	12,20	145,00	25,40	176,00	25,40
	80	-	-	73,00	13,80	-	-	173,00	28,70
	90	-	-	70,20	15,50	-	-	170,00	32,10
	100	-	-	67,40	17,20	-	-	167,00	35,40
	110	-	-	-	-	-	-	165,00	38,70
	120	-	-	-	-	-	-	162,00	42,10
120-46	20	99,30	4,47	110,00	4,47	218,00	9,97	228,00	9,97
	30	91,40	6,44	107,00	6,44	210,00	13,90	225,00	13,90
	40	84,00	8,41	103,00	8,41	202,00	17,90	222,00	17,90
	50	-	-	100,00	10,40	195,00	21,80	219,00	21,80
	60	-	-	97,30	12,40	188,00	25,80	216,00	25,80
	70	-	-	94,30	14,30	-	-	213,00	29,70
	80	-	-	91,50	16,30	-	-	210,00	33,70
	90	-	-	-	-	-	-	207,00	37,60
	100	-	-	-	-	-	-	204,00	41,50
	110	-	-	-	-	-	-	201,00	45,50
	120	-	-	-	-	-	-	199,00	49,40

The performance datas are valid for all designs. For exact deliveries as a function of the viscosity of the fluid to be pumped (also for other viscosities than those mentioned above) and the pump speed, please refer to the individual characteristics.

Performance table Delivery flow Q [l/min] and power absorbed P [kW]

Pump size	Delivery pressure	n = 1450 1/min				n = 2900 1/min			
		ν = 6 mm²/s		ν = 40 mm²/s		ν = 6 mm²/s		ν = 40 mm²/s	
SM...	Δp bar	Q l/min	P kW	Q l/min	P kW	Q l/min	P kW	Q l/min	P kW
210-40	20	145,00	6,51	158,00	6,51	314,00	14,80	327,00	14,80
	30	135,00	9,33	154,00	9,33	304,00	20,40	323,00	20,40
	40	125,00	12,10	150,00	12,10	294,00	26,10	319,00	26,10
	50	116,00	15,00	146,00	15,00	285,00	31,70	315,00	31,70
	60	-	-	142,00	17,80	276,00	37,30	311,00	37,30
	70	-	-	138,00	20,60	267,00	43,00	307,00	43,00
	80	-	-	134,00	23,40	259,00	48,60	303,00	48,60
	90	-	-	131,00	26,20	-	-	300,00	54,20
	100	-	-	127,00	29,00	-	-	296,00	59,90
	110	-	-	-	-	-	-	293,00	65,50
	120	-	-	-	-	-	-	289,00	71,10
210-46	20	183,00	7,95	199,00	7,95	395,00	17,70	411,00	17,70
	30	170,00	11,50	194,00	11,50	383,00	24,70	406,00	24,70
	40	159,00	15,00	189,00	15,00	371,00	31,80	401,00	31,80
	50	-	-	184,00	18,60	360,00	38,90	396,00	38,90
	60	-	-	179,00	22,10	349,00	46,00	391,00	46,00
	70	-	-	175,00	25,60	-	-	387,00	53,00
	80	-	-	170,00	29,20	-	-	382,00	60,10
	90	-	-	-	-	-	-	378,00	67,20
	100	-	-	-	-	-	-	373,00	74,30
	110	-	-	-	-	-	-	369,00	81,30
	120	-	-	-	-	-	-	365,00	88,40
280-43	20	212,00	9,73	232,00	9,73	460,00	22,40	480,00	22,40
	30	198,00	13,90	226,00	13,90	445,00	30,70	474,00	30,70
	40	184,00	18,00	220,00	18,00	431,00	38,90	468,00	38,90
	50	170,00	22,10	214,00	22,10	418,00	47,20	462,00	47,20
	60	-	-	208,00	26,30	405,00	55,50	456,00	55,50
	70	-	-	202,00	30,40	392,00	63,70	450,00	63,70
	80	-	-	197,00	34,50	-	-	445,00	72,00
	90	-	-	192,00	38,70	-	-	439,00	80,20
	100	-	-	-	-	-	-	434,00	88,50
	110	-	-	-	-	-	-	429,00	96,80
	120	-	-	-	-	-	-	424,00	105,00
280-46	20	245,00	10,80	265,00	10,80	526,00	24,60	546,00	24,60
	30	230,00	15,50	258,00	15,50	511,00	33,90	539,00	33,90
	40	216,00	20,20	252,00	20,20	497,00	43,30	533,00	43,30
	50	-	-	246,00	24,90	483,00	52,70	527,00	52,70
	60	-	-	241,00	29,50	470,00	62,00	521,00	62,00
	70	-	-	235,00	34,20	-	-	516,00	71,40
	80	-	-	230,00	38,90	-	-	510,00	80,70
	90	-	-	-	-	-	-	505,00	90,10
	100	-	-	-	-	-	-	500,00	99,40
	110	-	-	-	-	-	-	494,00	109,00
	120	-	-	-	-	-	-	489,00	118,00
440-40	20	309,00	14,00	332,00	14,00	659,00	32,50	682,00	32,50
	30	292,00	19,80	325,00	19,80	642,00	44,10	675,00	44,10
	40	276,00	25,60	318,00	25,60	626,00	55,80	668,00	55,80
	50	261,00	31,50	311,00	31,50	611,00	67,50	661,00	67,50
	60	-	-	305,00	37,30	596,00	79,10	655,00	79,10
	70	-	-	298,00	43,10	581,00	90,80	649,00	90,80
	80	-	-	292,00	49,00	567,00	102,00	642,00	102,00
	90	-	-	286,00	54,80	-	-	636,00	114,00
	100	-	-	280,00	60,60	-	-	630,00	126,00
	110	-	-	-	-	-	-	624,00	138,00
	120	-	-	-	-	-	-	618,00	149,00
440-46	20	396,00	17,10	424,00	17,10	841,00	38,80	869,00	38,80
	30	375,00	24,60	415,00	24,60	821,00	53,70	860,00	53,70
	40	356,00	32,00	406,00	32,00	801,00	68,50	852,00	68,50
	50	-	-	398,00	39,40	782,00	83,40	844,00	83,40
	60	-	-	390,00	46,80	764,00	98,20	836,00	98,20
	70	-	-	382,00	54,30	-	-	828,00	113,00
	80	-	-	375,00	61,70	-	-	820,00	128,00
	90	-	-	-	-	-	-	813,00	143,00
	100	-	-	-	-	-	-	806,00	158,00
	110	-	-	-	-	-	-	798,00	173,00
	120	-	-	-	-	-	-	791,00	187,00

The performance datas are valid for all designs. For exact deliveries as a function of the viscosity of the fluid to be pumped (also for other viscosities than those mentioned above) and the pump speed, please refer to the individual characteristics.

Performance table Delivery flow Q [l/min] and power absorbed P [kW]

Pump size	Delivery pressure	n = 1450 1/min				n = 2900 1/min			
		ν = 6 mm ²/s		ν = 40 mm ²/s		ν = 6 mm ²/s		ν = 40 mm ²/s	
SM...	Δp bar	Q l/min	P kW	Q l/min	P kW	Q l/min	P kW	Q l/min	P kW
660-40	20	485,00	21,30	516,00	21,30	1026,00	49,00	1057,00	49,00
	30	463,00	30,30	507,00	30,30	1003,00	67,00	1047,00	67,00
	40	441,00	39,30	497,00	39,30	982,00	85,00	1038,00	85,00
	50	421,00	48,30	488,00	48,30	961,00	103,00	1029,00	103,00
	60	–	–	479,00	57,30	941,00	121,00	1020,00	121,00
	70	–	–	471,00	66,30	921,00	139,00	1011,00	139,00
	80	–	–	463,00	75,30	–	–	1003,00	157,00
	90	–	–	454,00	84,30	–	–	995,00	175,00
	100	–	–	–	–	–	–	987,00	193,00
	110	–	–	–	–	–	–	979,00	211,00
	120	–	–	–	–	–	–	971,00	229,00
660-46	20	598,00	25,40	636,00	25,40	1264,00	57,30	1301,00	57,30
	30	571,00	36,50	624,00	36,50	1236,00	79,50	1289,00	79,50
	40	545,00	47,60	613,00	47,60	1210,00	102,00	1278,00	102,00
	50	–	–	602,00	58,70	1185,00	124,00	1267,00	124,00
	60	–	–	591,00	69,80	1160,00	146,00	1256,00	146,00
	70	–	–	580,00	80,80	–	–	1246,00	168,00
	80	–	–	–	–	–	–	1236,00	190,00
	90	–	–	–	–	–	–	1226,00	213,00
	100	–	–	–	–	–	–	1216,00	235,00
	110	–	–	–	–	–	–	1206,00	257,00
	120	–	–	–	–	–	–	–	–
940-42	20	703,00	30,70	752,00	30,70	1492,00	70,30	1541,00	70,30
	30	667,00	43,90	736,00	43,90	1456,00	96,60	1525,00	96,60
	40	633,00	57,00	721,00	57,00	1423,00	123,00	1511,00	123,00
	50	–	–	707,00	70,20	1390,00	149,00	1496,00	149,00
	60	–	–	693,00	83,30	1358,00	176,00	1483,00	176,00
	70	–	–	680,00	96,50	1328,00	202,00	1469,00	202,00
	80	–	–	667,00	110,00	–	–	1456,00	228,00
	90	–	–	654,00	123,00	–	–	1443,00	254,00
	100	–	–	–	–	–	–	1431,00	281,00
	110	–	–	–	–	–	–	1418,00	307,00
	120	–	–	–	–	–	–	1406,00	333,00
940-46	20	861,00	36,00	909,00	36,00	1808,00	80,80	1857,00	80,80
	30	825,00	51,80	894,00	51,80	1772,00	112,00	1841,00	112,00
	40	791,00	67,60	879,00	67,60	1738,00	144,00	1826,00	144,00
	50	–	–	865,00	83,30	1706,00	176,00	1812,00	176,00
	60	–	–	851,00	99,10	1674,00	207,00	1798,00	207,00
	70	–	–	838,00	115,00	–	–	1785,00	239,00
	80	–	–	–	–	–	–	1772,00	270,00
	90	–	–	–	–	–	–	1759,00	302,00
	100	–	–	–	–	–	–	1746,00	333,00
	110	–	–	–	–	–	–	1734,00	365,00
	120	–	–	–	–	–	–	–	–
1300-42	20	1009,00	42,90	1070,00	42,90	2126,00	97,20	2187,00	97,20
	30	964,00	61,50	1050,00	61,50	2081,00	134,00	2168,00	134,00
	40	921,00	80,20	1032,00	80,20	2039,00	172,00	2149,00	172,00
	50	–	–	1014,00	98,80	1998,00	209,00	2131,00	209,00
	60	–	–	997,00	117,00	1958,00	246,00	2114,00	246,00
	70	–	–	980,00	136,00	1919,00	283,00	2097,00	283,00
	80	–	–	963,00	155,00	–	–	2081,00	321,00
	90	–	–	947,00	173,00	–	–	2064,00	358,00
	100	–	–	–	–	–	–	2048,00	395,00
	110	–	–	–	–	–	–	2033,00	432,00
	120	–	–	–	–	–	–	2017,00	470,00
1300-46	20	1191,00	49,00	1252,00	49,00				
	30	1146,00	70,60	1232,00	70,60				
	40	1103,00	92,30	1214,00	92,30				
	50	–	–	1196,00	114,00				
	60	–	–	1179,00	136,00				
	70	–	–	1162,00	157,00				
	80	–	–	–	–				
	90	–	–	–	–				
	100	–	–	–	–				
	110	–	–	–	–				
	120	–	–	–	–				

The performance datas are valid for all designs. For exact deliveries as a function of the viscosity of the fluid to be pumped (also for other viscosities than those mentioned above) and the pump speed, please refer to the individual characteristics.

Performance table Delivery flow Q [l/min] and power absorbed P [kW]

Pump size	Delivery pressure	n = 1450 1/min				n = 2900 1/min			
		ν = 6 mm²/s		ν = 40 mm²/s		ν = 6 mm²/s		ν = 40 mm²/s	
SM...	Δp bar	Q l/min	P kW	Q l/min	P kW	Q l/min	P kW	Q l/min	P kW
1700-42 ①	20	1360,00	57,10	1435,00	57,10				
	30	1304,00	82,00	1411,00	82,00				
	40	1252,00	107,00	1388,00	107,00				
	50	-	-	1366,00	132,00				
	60	-	-	1345,00	157,00				
	70	-	-	1324,00	182,00				
	80	-	-	1304,00	206,00				
	90	-	-	1284,00	231,00				
	100	-	-	-	-				
	110	-	-	-	-				
	120	-	-	-	-				
1700-46 ①	20	1595,00	65,00	1671,00	65,00				
	30	1540,00	93,80	1647,00	93,80				
	40	1488,00	123,00	1624,00	123,00				
	50	-	-	1602,00	151,00				
	60	-	-	1581,00	180,00				
	70	-	-	1560,00	209,00				
	80	-	-	-	-				
	90	-	-	-	-				
	100	-	-	-	-				
	110	-	-	-	-				
	120	-	-	-	-				
2200-42 ①	20	1784,00	74,40	1875,00	74,40				
	30	1717,00	107,00	1846,00	107,00				
	40	1654,00	139,00	1818,00	139,00				
	50	-	-	1792,00	172,00				
	60	-	-	1766,00	204,00				
	70	-	-	1741,00	237,00				
	80	-	-	1716,00	269,00				
	90	-	-	1692,00	301,00				
	100	-	-	-	-				
	110	-	-	-	-				
	120	-	-	-	-				
2200-46 ①	20	2083,00	84,40	2174,00	84,40				
	30	2017,00	122,00	2145,00	122,00				
	40	1953,00	159,00	2118,00	159,00				
	50	-	-	2091,00	197,00				
	60	-	-	2065,00	234,00				
	70	-	-	2040,00	271,00				
	80	-	-	-					
	90	-	-	-					
	100	-	-	-					
	110	-	-	-					
	120	-	-	-					

① These pump sizes are only available in fabricated steel design (please see also remarks under temperature and pressure limits, page 2).

The performance datas are valid for all designs. For exact deliveries as a function of the viscosity of the fluid to be pumped (also for other viscosities than those mentioned above) and the pump speed, please refer to the individual characteristics.

Performance table Delivery flow Q [l/min] and power absorbed P [kW]

Pump size	Delivery pressure	n = 1750 1/min				n = 3500 1/min			
		ν = 6 mm²/s		ν = 40 mm²/s		ν = 6 mm²/s		ν = 40 mm²/s	
SM...	Δp bar	Q l/min	P kW	Q l/min	P kW	Q l/min	P kW	Q l/min	P kW
40-38	20	31,10	1,49	35,30	1,49	69,70	2,78	73,80	2,78
	30	28,10	2,14	34,00	2,14	66,60	4,06	72,50	4,06
	40	25,20	2,78	32,70	2,78	63,80	5,35	71,20	5,35
	50	22,40	3,42	31,50	3,42	61,00	6,63	70,00	6,63
	60	19,70	4,06	30,30	4,06	58,30	7,92	68,80	7,92
	70	-	-	29,10	4,71	55,60	9,20	67,70	9,20
	80	-	-	28,00	5,35	53,10	10,50	66,50	10,50
	90	-	-	26,90	5,99	50,50	11,80	65,40	11,80
	100	-	-	25,80	6,63	-	-	64,30	13,10
	110	-	-	24,70	7,27	-	-	63,30	14,30
	120	-	-	23,70	7,92	-	-	62,20	15,60
40-46	20	42,40	2,02	47,40	2,02	93,70	4,65	98,80	4,65
	30	38,70	2,87	45,80	2,87	90,00	6,36	97,20	6,36
	40	35,10	3,73	44,20	3,73	86,50	8,07	95,60	8,07
	50	31,70	4,59	42,70	4,59	83,10	9,79	94,10	9,79
	60	-	-	41,30	5,44	79,80	11,50	92,70	11,50
	70	-	-	39,90	6,30	76,60	13,20	91,30	13,20
	80	-	-	38,50	7,16	-	-	89,90	14,90
	90	-	-	37,10	8,01	-	-	88,50	16,60
	100	-	-	-	-	-	-	87,20	18,30
	110	-	-	-	-	-	-	85,90	20,10
	120	-	-	-	-	-	-	84,60	21,80
80-36	20	58,20	2,82	65,00	2,82	128,00	6,61	135,00	6,61
	30	53,20	3,99	62,90	3,99	123,00	8,95	133,00	8,95
	40	48,50	5,16	60,80	5,16	119,00	11,30	131,00	11,30
	50	43,90	6,33	58,90	6,33	114,00	13,60	129,00	13,60
	60	39,50	7,50	56,90	7,50	110,00	16,00	127,00	16,00
	70	35,20	8,68	55,10	8,68	105,00	18,30	125,00	18,30
	80	-	-	53,30	9,85	101,00	20,70	123,00	20,70
	90	-	-	51,50	11,00	97,10	23,00	122,00	23,00
	100	-	-	49,70	12,20	-	-	120,00	25,30
	110	-	-	48,00	13,40	-	-	118,00	27,70
	120	-	-	46,30	14,50	-	-	117,00	30,00
80-42	20	70,50	3,32	78,80	3,32	156,00	7,61	164,00	7,61
	30	64,40	4,75	76,10	4,75	150,00	10,50	161,00	10,50
	40	58,70	6,17	73,60	6,17	144,00	13,30	159,00	13,30
	50	53,10	7,59	71,20	7,59	138,00	16,10	156,00	16,10
	60	47,70	9,01	68,80	9,01	133,00	19,00	154,00	19,00
	70	-	-	66,50	10,40	128,00	21,80	152,00	21,80
	80	-	-	64,20	11,90	123,00	24,70	150,00	24,70
	90	-	-	62,00	13,30	-	-	147,00	27,50
	100	-	-	59,80	14,70	-	-	145,00	30,40
	110	-	-	57,70	16,10	-	-	143,00	33,20
	120	-	-	-	-	-	-	141,00	36,00
80-46	20	85,60	3,83	93,90	3,83	186,00	8,61	194,00	8,61
	30	79,50	5,50	91,20	5,50	180,00	12,00	192,00	12,00
	40	73,70	7,17	88,70	7,17	174,00	15,30	189,00	15,30
	50	68,10	8,84	86,20	8,84	169,00	18,60	187,00	18,60
	60	-	-	83,80	10,50	163,00	22,00	184,00	22,00
	70	-	-	81,50	12,20	158,00	25,30	182,00	25,30
	80	-	-	79,30	13,90	-	-	180,00	28,70
	90	-	-	77,10	15,50	-	-	177,00	32,00
	100	-	-	-	-	-	-	175,00	35,40
	110	-	-	-	-	-	-	173,00	38,70
	120	-	-	-	-	-	-	171,00	42,10
120-42	20	102,00	4,78	112,00	4,78	222,00	11,10	233,00	11,10
	30	93,70	6,79	109,00	6,79	214,00	15,10	230,00	15,10
	40	86,20	8,80	106,00	8,80	207,00	19,10	226,00	19,10
	50	79,00	10,80	103,00	10,80	200,00	23,10	223,00	23,10
	60	72,00	12,80	99,60	12,80	193,00	27,20	220,00	27,20
	70	-	-	96,60	14,80	186,00	31,20	217,00	31,20
	80	-	-	93,70	16,80	179,00	35,20	214,00	35,20
	90	-	-	90,90	18,90	-	-	212,00	39,20
	100	-	-	88,10	20,90	-	-	209,00	43,20
	110	-	-	85,30	22,90	-	-	206,00	47,30
	120	-	-	-	-	-	-	203,00	51,30
120-46	20	124,00	5,52	135,00	5,52	267,00	12,60	277,00	12,60
	30	116,00	7,90	131,00	7,90	259,00	17,30	274,00	17,30
	40	108,00	10,30	128,00	10,30	251,00	22,10	271,00	22,10
	50	101,00	12,70	125,00	12,70	244,00	26,80	268,00	26,80
	60	-	-	122,00	15,00	237,00	31,60	265,00	31,60
	70	-	-	119,00	17,40	230,00	36,40	262,00	36,40
	80	-	-	116,00	19,80	-	-	259,00	41,10
	90	-	-	113,00	22,20	-	-	256,00	45,90
	100	-	-	-	-	-	-	253,00	50,70
	110	-	-	-	-	-	-	250,00	55,40
	120	-	-	-	-	-	-	248,00	60,20

The performance datas are valid for all designs. For exact deliveries as a function of the viscosity of the fluid to be pumped (also for other viscosities than those mentioned above) and the pump speed, please refer to the individual characteristics.

Performance table Delivery flow Q [l/min] and power absorbed P [kW]

Pump size	Delivery pressure	n = 1750 1/min				n = 3500 1/min			
		ν = 6 mm²/s		ν = 40 mm²/s		ν = 6 mm²/s		ν = 40 mm²/s	
SM...	Δp bar	Q l/min	P kW	Q l/min	P kW	Q l/min	P kW	Q l/min	P kW
210-40	20	180,00	8,08	193,00	8,08	384,00	18,70	397,00	18,70
	30	170,00	11,50	189,00	11,50	374,00	25,50	393,00	25,50
	40	160,00	14,90	185,00	14,90	364,00	32,30	389,00	32,30
	50	151,00	18,30	181,00	18,30	355,00	39,10	385,00	39,10
	60	142,00	21,70	177,00	21,70	346,00	45,90	381,00	45,90
	70	-	-	173,00	25,10	337,00	52,70	377,00	52,70
	80	-	-	169,00	28,50	329,00	59,50	373,00	59,50
	90	-	-	166,00	31,90	321,00	66,30	370,00	66,30
	100	-	-	162,00	35,30	-	-	366,00	73,10
	110	-	-	159,00	38,70	-	-	363,00	79,90
	120	-	-	-	-	-	-	359,00	86,70
210-46	20	227,00	9,82	243,00	9,82	483,00	22,20	499,00	22,20
	30	214,00	14,10	238,00	14,10	471,00	30,70	494,00	30,70
	40	203,00	18,40	233,00	18,40	459,00	39,30	489,00	39,30
	50	192,00	22,60	228,00	22,60	448,00	47,80	484,00	47,80
	60	-	-	223,00	26,90	437,00	56,40	479,00	56,40
	70	-	-	218,00	31,20	427,00	64,90	475,00	64,90
	80	-	-	214,00	35,40	-	-	470,00	73,40
	90	-	-	210,00	39,70	-	-	466,00	82,00
	100	-	-	-	-	-	-	461,00	90,50
	110	-	-	-	-	-	-	457,00	99,00
	120	-	-	-	-	-	-	453,00	108,00
280-43	20	263,00	12,10	283,00	12,10	563,00	28,50	583,00	28,50
	30	249,00	17,10	277,00	17,10	548,00	38,50	576,00	38,50
	40	235,00	22,10	271,00	22,10	534,00	48,50	570,00	48,50
	50	221,00	27,10	265,00	27,10	521,00	58,40	564,00	58,40
	60	-	-	259,00	32,10	508,00	68,40	558,00	68,40
	70	-	-	254,00	37,00	495,00	78,40	553,00	78,40
	80	-	-	248,00	42,00	482,00	88,30	547,00	88,30
	90	-	-	243,00	47,00	-	-	542,00	98,30
	100	-	-	238,00	52,00	-	-	537,00	108,00
	110	-	-	-	-	-	-	532,00	118,00
	120	-	-	-	-	-	-	526,00	128,00
280-46	20	303,00	13,40	323,00	13,30	642,00	31,10	662,00	31,10
	30	288,00	19,10	317,00	19,10	627,00	42,40	655,00	42,40
	40	274,00	24,70	310,00	24,70	613,00	53,70	649,00	53,70
	50	261,00	30,40	305,00	30,40	600,00	65,00	643,00	65,00
	60	-	-	299,00	36,00	587,00	76,30	637,00	76,30
	70	-	-	293,00	41,70	574,00	87,60	632,00	87,60
	80	-	-	288,00	47,30	-	-	626,00	98,90
	90	-	-	282,00	52,90	-	-	621,00	110,00
	100	-	-	-	-	-	-	616,00	121,00
	110	-	-	-	-	-	-	611,00	133,00
	120	-	-	-	-	-	-	605,00	144,00
440-40	20	381,00	17,40	405,00	17,40	804,00	41,50	827,00	41,50
	30	365,00	24,40	397,00	24,40	787,00	55,50	820,00	55,50
	40	348,00	31,50	390,00	31,50	771,00	69,60	813,00	69,60
	50	333,00	38,50	384,00	38,50	756,00	83,70	806,00	83,70
	60	318,00	45,60	377,00	45,60	741,00	97,80	800,00	97,80
	70	-	-	371,00	52,60	726,00	112,00	793,00	112,00
	80	-	-	365,00	59,70	712,00	126,00	787,00	126,00
	90	-	-	358,00	66,70	698,00	140,00	781,00	140,00
	100	-	-	352,00	73,70	-	-	775,00	154,00
	110	-	-	347,00	80,80	-	-	769,00	168,00
	120	-	-	-	-	-	-	763,00	182,00
440-46	20	488,00	21,20	516,00	21,20	1026,00	49,10	1054,00	49,10
	30	467,00	30,20	507,00	30,20	1005,00	67,10	1045,00	67,10
	40	448,00	39,20	499,00	39,20	986,00	85,00	1036,00	85,00
	50	429,00	48,10	490,00	48,10	967,00	103,00	1028,00	103,00
	60	-	-	482,00	57,10	949,00	121,00	1020,00	121,00
	70	-	-	475,00	66,10	931,00	139,00	1012,00	139,00
	80	-	-	467,00	75,00	-	-	1005,00	157,00
	90	-	-	460,00	84,00	-	-	997,00	175,00
	100	-	-	-	-	-	-	990,00	193,00
	110	-	-	-	-	-	-	983,00	210,00
	120	-	-	-	-	-	-	976,00	228,00

The performance datas are valid for all designs. For exact deliveries as a function of the viscosity of the fluid to be pumped (also for other viscosities than those mentioned above) and the pump speed, please refer to the individual characteristics.

Performance table Delivery flow Q [l/min] and power absorbed P [kW]

Pump size	Delivery pressure	n = 1750 1/min				n = 3500 1/min			
		ν = 6 mm²/s		ν = 40 mm²/s		ν = 6 mm²/s		ν = 40 mm²/s	
SM...	Δp bar	Q l/min	P kW	Q l/min	P kW	Q l/min	P kW	Q l/min	P kW
660-40	20	597,00	26,50	628,00	26,50	1250,00	62,40	1281,00	62,40
	30	575,00	37,30	618,00	37,30	1227,00	84,10	1271,00	84,10
	40	553,00	48,20	609,00	48,20	1205,00	106,00	1261,00	106,00
	50	533,00	59,10	600,00	59,10	1185,00	128,00	1252,00	128,00
	60	-	-	591,00	69,90	1165,00	149,00	1244,00	149,00
	70	-	-	583,00	80,80	1145,00	171,00	1235,00	171,00
	80	-	-	574,00	91,70	1126,00	193,00	1227,00	193,00
	90	-	-	566,00	103,00	-	-	1218,00	215,00
	100	-	-	558,00	113,00	-	-	1210,00	236,00
	110	-	-	-	-	-	-	1202,00	258,00
	120	-	-	-	-	-	-	1195,00	280,00
660-46	20	736,00	31,50	774,00	31,50				
	30	708,00	44,90	762,00	44,90				
	40	682,00	58,20	750,00	58,20				
	50	-	-	739,00	71,60				
	60	-	-	729,00	85,00				
	70	-	-	718,00	98,40				
	80	-	-	708,00	112,00				
	90	-	-	-	-				
	100	-	-	-	-				
	110	-	-	-	-				
	120	-	-	-	-				
940-42	20	866,00	38,20	915,00	38,20				
	30	830,00	54,10	899,00	54,10				
	40	797,00	69,90	885,00	69,90				
	50	764,00	85,80	870,00	85,80				
	60	-	-	857,00	102,00				
	70	-	-	843,00	118,00				
	80	-	-	830,00	133,00				
	90	-	-	817,00	149,00				
	100	-	-	-	-				
	110	-	-	-	-				
	120	-	-	-	-				
940-46	20	1057,00	44,50	1105,00	44,50				
	30	1021,00	63,60	1090,00	63,60				
	40	987,00	82,60	1075,00	82,60				
	50	-	-	1061,00	102,00				
	60	-	-	1047,00	121,00				
	70	-	-	1034,00	140,00				
	80	-	-	1021,00	159,00				
	90	-	-	-	-				
	100	-	-	-	-				
	110	-	-	-	-				
	120	-	-	-	-				
1300-42	20	1240,00	53,20	1301,00	53,20				
	30	1195,00	75,70	1282,00	75,70				
	40	1153,00	98,20	1263,00	98,20				
	50	1112,00	121,00	1245,00	121,00				
	60	-	-	1228,00	143,00				
	70	-	-	1211,00	166,00				
	80	-	-	1194,00	188,00				
	90	-	-	1178,00	211,00				
	100	-	-	-	-				
	110	-	-	-	-				
	120	-	-	-	-				
1300-46	20	1459,00	60,50	1521,00	60,50				
	30	1415,00	86,70	1501,00	86,70				
	40	1372,00	113,00	1483,00	113,00				
	50	-	-	1465,00	139,00				
	60	-	-	1447,00	165,00				
	70	-	-	1431,00	191,00				
	80	-	-	1414,00	217,00				
	90	-	-	-	-				
	100	-	-	-	-				
	110	-	-	-	-				
	120	-	-	-	-				

The performance datas are valid for all designs. For exact deliveries as a function of the viscosity of the fluid to be pumped (also for other viscosities than those mentioned above) and the pump speed, please refer to the individual characteristics.

Performance table Delivery flow Q [l/min] and power absorbed P [kW]

Pump size	Delivery pressure	n = 1750 1/min				n = 3500 1/min			
		ν = 6 mm²/s		ν = 40 mm²/s		ν = 6 mm²/s		ν = 40 mm²/s	
SM...	Δp bar	Q l/min	P kW	Q l/min	P kW	Q l/min	P kW	Q l/min	P kW
1700-42 ①	20	1668,00	70,80	1744,00	70,80				
	30	1613,00	101,00	1720,00	101,00				
	40	1561,00	131,00	1697,00	131,00				
	50	1511,00	161,00	1675,00	161,00				
	60	-	-	1654,00	191,00				
	70	-	-	1633,00	221,00				
	80	-	-	1613,00	251,00				
	90	-	-	1593,00	281,00				
	100	-	-	-	-				
	110	-	-	-	-				
	120	-	-	-	-				
1700-46 ①	20	1953,00	80,30	2029,00	80,30				
	30	1898,00	115,00	2005,00	115,00				
	40	1846,00	150,00	1982,00	150,00				
	50	-	-	1960,00	185,00				
	60	-	-	1938,00	219,00				
	70	-	-	1918,00	254,00				
	80	-	-	1897,00	289,00				
	90	-	-	-	-				
	100	-	-	-	-				
	110	-	-	-	-				
	120	-	-	-	-				
2200-42 ①	20	2186,00	92,20	2278,00	92,20				
	30	2120,00	131,00	2249,00	131,00				
	40	2056,00	170,00	2221,00	170,00				
	50	1996,00	210,00	2194,00	210,00				
	60	-	-	2168,00	249,00				
	70	-	-	2143,00	288,00				
	80	-	-	2119,00	327,00				
	90	-	-	2094,00	366,00				
	100	-	-	-	-				
	110	-	-	-	-				
	120	-	-	-	-				
2200-46 ①	20	2548,00	104,00	2639,00	104,00				
	30	2481,00	149,00	2610,00	149,00				
	40	2418,00	195,00	2582,00	195,00				
	50	-	-	2556,00	240,00				
	60	-	-	2530,00	285,00				
	70	-	-	2505,00	330,00				
	80	-	-	2480,00	375,00				
	90	-	-	-	-				
	100	-	-	-	-				
	110	-	-	-	-				
	120	-	-	-	-				

① These pump sizes are only available in fabricated steel design (please see also remarks under temperature and pressure limits, page 2).

The performance datas are valid for all designs. For exact deliveries as a function of the viscosity of the fluid to be pumped (also for other viscosities than those mentioned above) and the pump speed, please refer to the individual characteristics.

Sectional drawing

SMH... - horizontal foot mounted pump, internal ball bearing, with mechanical seal, design U...
internal ball bearing, with stuffing box, design U2
internal ball bearing, with shaft sealing rings, design U3

Design U... with mechanical seal

Section A-B

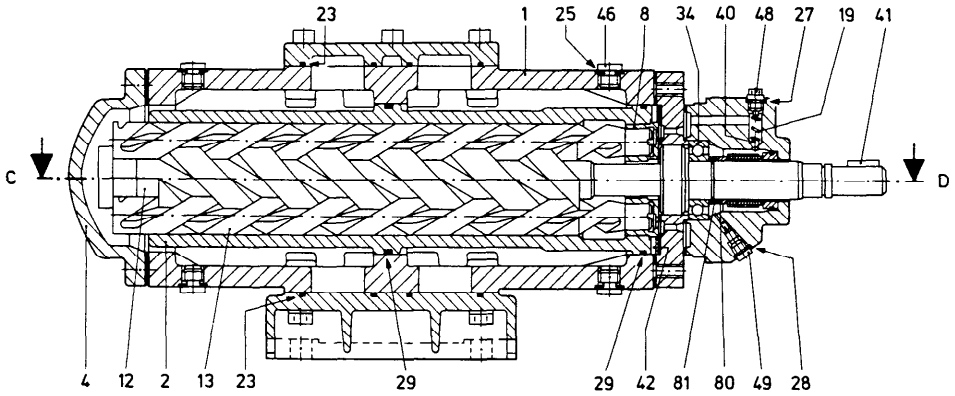

Section E-F

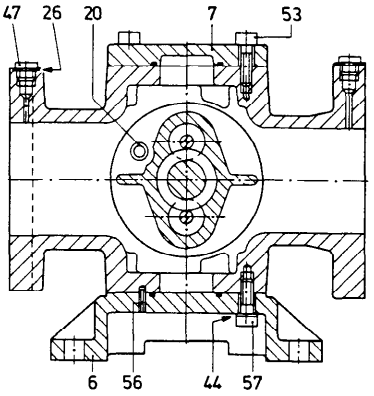

Section C-D

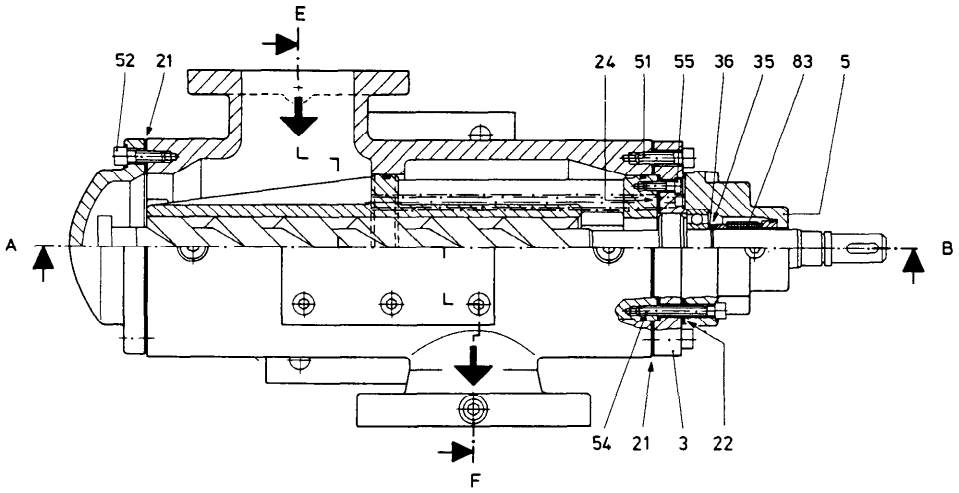

Design U2

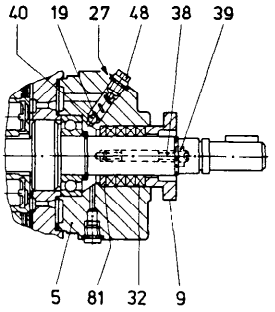

Design U3

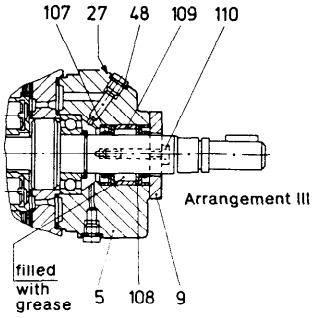

Arrangement of shaft seal rings

arrangement I against suction head
arrangement II against suction lift
arrangement III against suction head and suction lift

Design U... with mechanical seal at pump size 940 to 1300

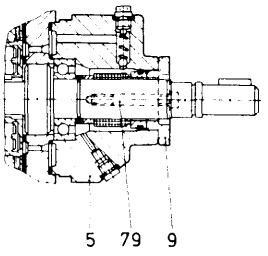

Part No.	Denomination
1	pump casing
2 ①	pump casing insert
3	pump cover, drive side
4	pump cover, non-drive side
5	shaft sealing housing
6	pump foot
7	pump casing cover
8 ①	balance bush
9	seal cover
	gland (only with design U2)
12 ①	driving spindle
13 ①	idler spindle
19	valve spring
20	balance pipe
21 ①	gasket
22 ①	gasket
23 ①	O-ring
24 ①	gasket
25 ①	joint washer
26 ①	joint washer
27 ①	joint washer
28 ①	joint washer
29 ①	O-ring
32 ①	gland packing ring
34 ①	groove ball bearing
35	circlip
36	supporting washer
38	stud bolt
39	hexagon nut

Part No.	Denomination
40	ball valve
41	key
42	straight pin
44	lock washer
46	screw plug
47	screw plug
48	stop screw
	screw plug (only with design U3)
49	screw plug
51	socket head cap screw
52	socket head cap screw
53	socket head cap screw
54	socket head cap screw
55	socket head cap screw
56	spring dowel
57	hexagon screw
79	socket head cap screw
80	spacer ring
81	supporting washer
	support ring (only with design U2)
83 ①	mechanical seal
107 ①	shaft seal ring
108	supporting ring
109	spacer bush
110	hexagon screw

① spare parts

Sectional drawing
SMH... - horizontal foot mounted pump, external ball bearing, with mechanical seal, design D... and E...
external ball bearing, with stuffing box, design KA2

Design D...

Section A-B

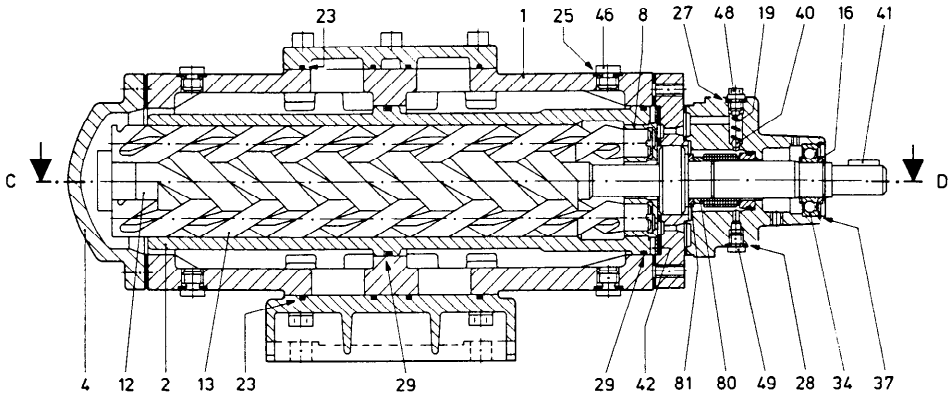

Section E-F

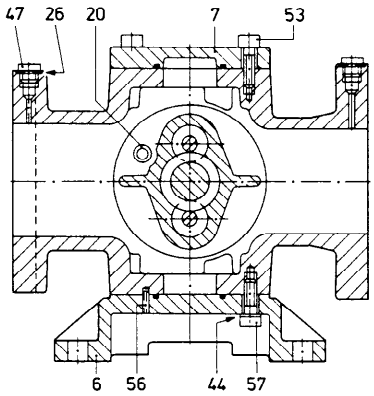

Section C-D

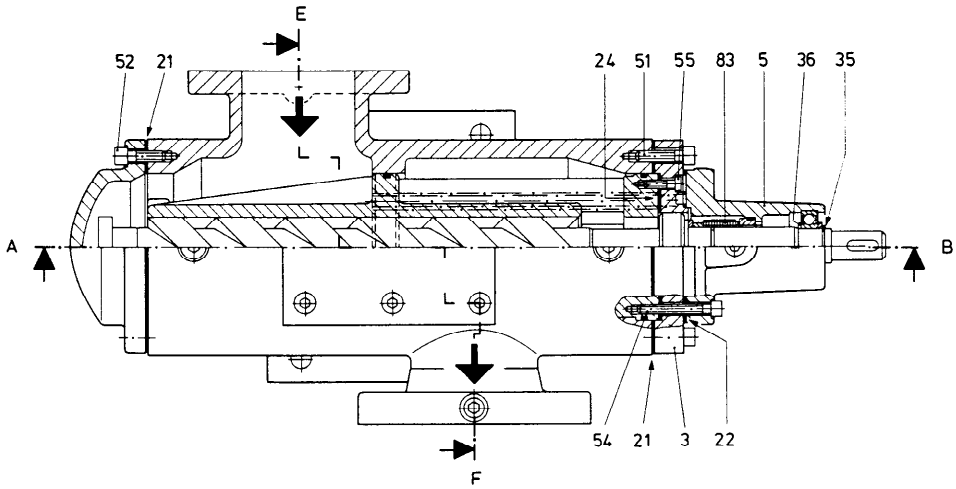

Design E...
bearing with grease nipple

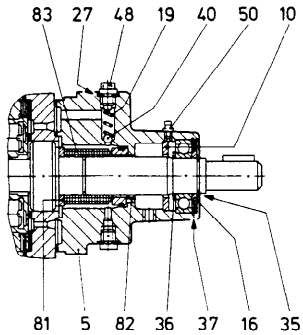

Design KA2

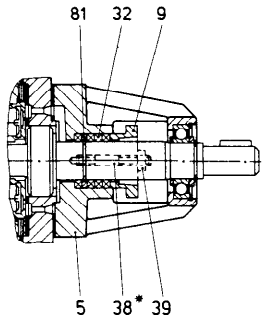

Up to pump size 210 with stud bolt, part No. 38. Pump size 280 to 1300 with eyelet bolt, part No. 38, and spring dowel, part No. 82 (not shown in the drawing)

Design KA2
at pump size 40

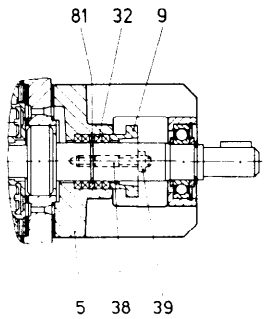

Part No.	Denomination
1	pump casing
2 ①	pump casing insert
3	pump cover, drive side
4	pump cover, non-drive side
5	bearing housing
6	pump foot
7	pump casing cover
8 ①	balance bush
9	gland
10	greasing chamber disc
12 ①	driving spindle
13 ①	idler spindle
16	spacer bush labyrinth ring (only with design E)
19	valve spring
20	balance pipe
21 ①	gasket
22 ①	gasket
23 ①	O-ring
24 ①	gasket
25 ①	joint washer
26 ①	joint washer
27 ①	joint washer
28 ①	joint washer
29 ①	O-ring
32 ①	gland packing ring
34 ①	groove ball bearing
35	circlip
36	supporting washer

Part No.	Denomination
37	circlip
38	stud bolt (with pump size 40 to 210) eyelet bolt (with pump size 280 to 1300)
39	hexagon nut
40	ball valve
41	key
42	straight pin
44	lock washer
46	screw plug
47	screw plug
48	stop screw
49	screw plug
50	lubricating nipple
51	socket head cap screw
52	socket head cap screw
53	socket head cap screw
54	socket head cap screw
55	socket head cap screw
56	spring dowel
57	hexagon screw
80	spacer ring
81	support ring
82	spring dowel
83 ①	mechanical seal

① spare parts

Sectional drawing

SMF... - flange mounted pump, internal ball bearing, with mechanical seal, design U...
internal ball bearing, with stuffing box, design U2
internal ball bearing, with shaft sealing rings, design U3

Design U... with mechanical seal

Section A-B

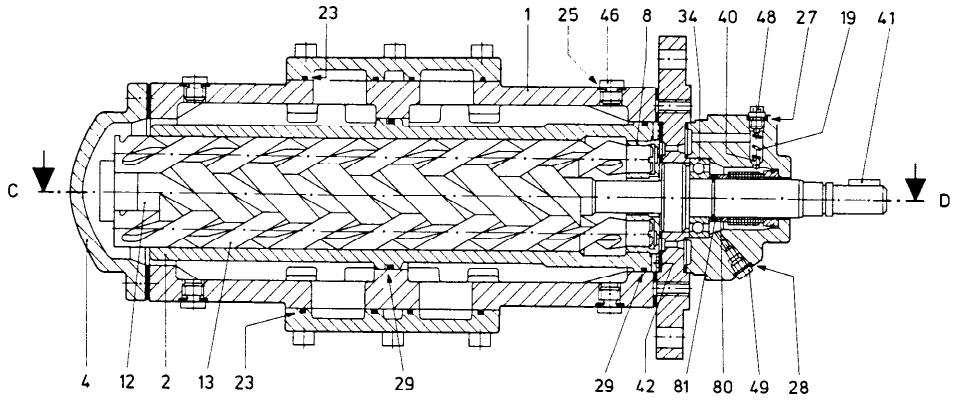

Section E-F

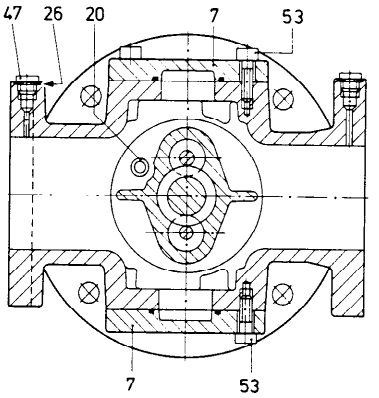

Section C-D

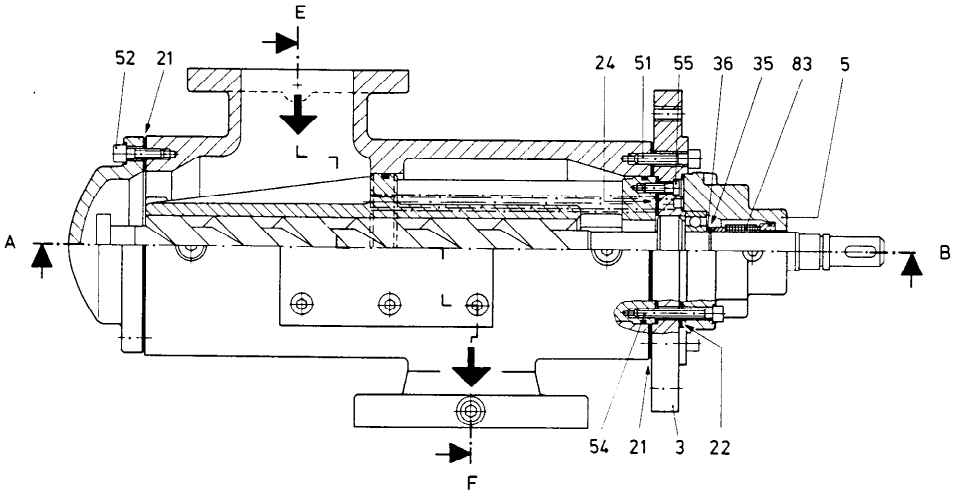

Design U2

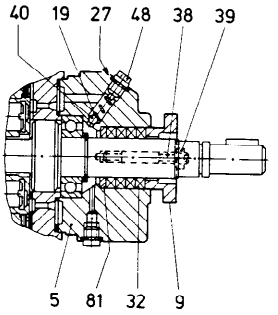

Design U3

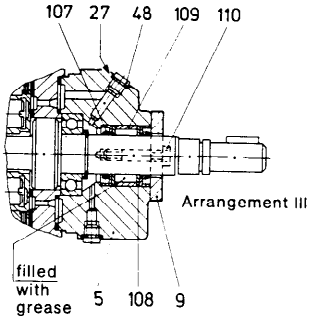

Arrangement of shaft seal rings

arrangement I against suction head
arrangement II against suction lift
arrangement III against suction head and suction lift

Design U... with mechanical seal at pump size 940 to 1300

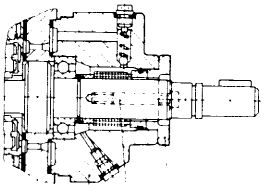

5 79 9

Part No.	Denomination
1	pump casing
2 ①	pump casing insert
3	pump cover, drive side
4	pump cover, non-drive side
5	shaft sealing housing
7	pump casing cover
8 ①	balance bush
9	seal cover
	gland (only with design U2)
12 ①	driving spindle
13 ①	idler spindle
19	valve spring
20	balance pipe
21 ①	gasket
22 ①	gasket
23 ①	O-ring
24 ①	gasket
25 ①	joint washer
26 ①	joint washer
27 ①	joint washer
28 ①	joint washer
29 ①	O-ring
32 ①	gland packing ring
34 ①	groove ball bearing
35	circlip
36	supporting washer
38	stud bolt
39	hexagon nut
40	ball valve

Part No.	Denomination
41	key
42	straight pin
46	screw plug
47	screw plug
48	stop screw
	screw plug (only with design U3)
49	screw plug
51	socket head cap screw
52	socket head cap screw
53	socket head cap screw
54	socket head cap screw
55	socket head cap screw
79	socket head cap screw
80	spacer ring
81	supporting washer
	support ring (only with design U2)
83 ①	mechanical seal
107 ①	shaft seal ring
108	supporting ring
109	spacer bush
110	hexagon screw

① spare parts

Sectional drawing
SMF... - flange mounted pump, external ball bearing, with mechanical seal, design D... and E...
external ball bearing, with stuffing box, design KA2

Design D...

Section A-B

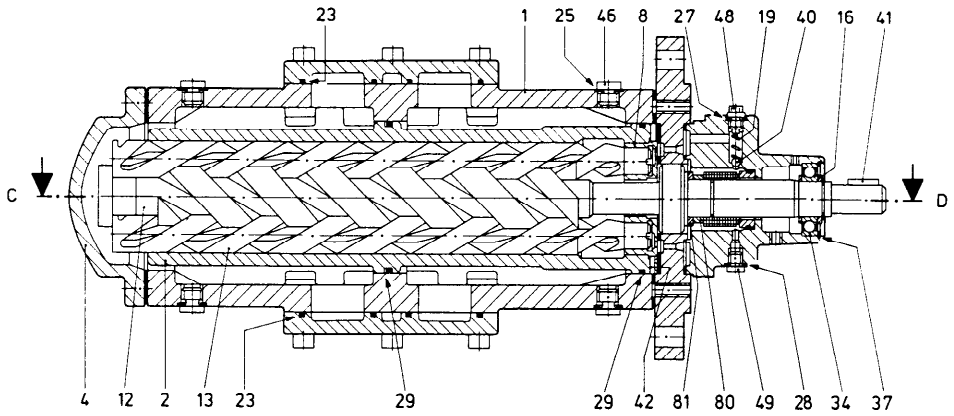

Section E-F

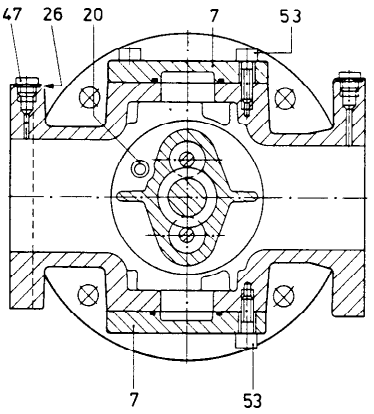

Section C-D

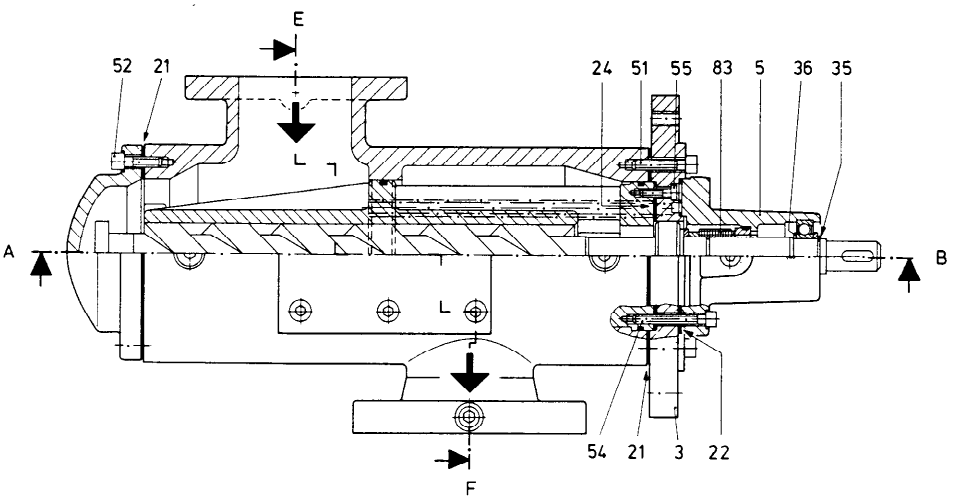

Design E...
bearing with grease nipple

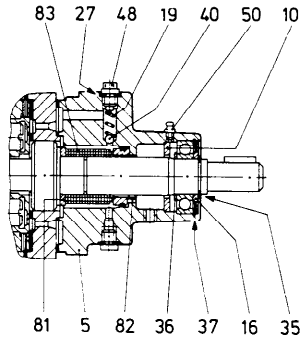

Design KA2

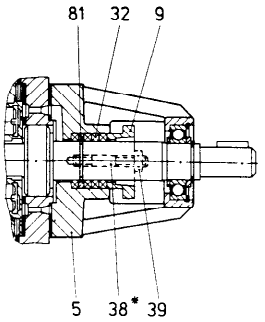

Up to pump size 210 with stud bolt, part No. 38. Pump size 280 to 1300 with eyelet bolt, part No. 38, and spring dowel, part No. 82 (not shown in the drawing)

Design KA2
at pump size 40

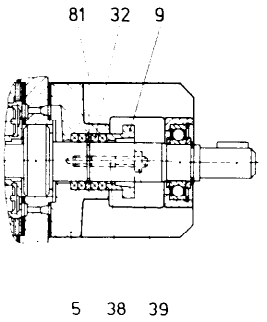

Part No.	Denomination
1	pump casing
2 ①	pump casing insert
3	pump cover, drive side
4	pump cover, non-drive side
5	bearing housing
7	pump casing cover
8 ①	balance bush
9	gland
10	greasing chamber disc
12 ①	driving spindle
13 ①	idler spindle
16	spacer bush
	labyrinth ring (only with design E)
19	valve spring
20	balance pipe
21 ①	gasket
22 ①	gasket
23 ①	O-ring
24 ①	gasket
25 ①	joint washer
26 ①	joint washer
27 ①	joint washer
28 ①	joint washer
29 ①	O-ring
32 ①	gland packing ring
34 ①	groove ball bearing
35	circlip
36	supporting washer
37	circlip

Part No.	Denomination
38	stud bolt (with pump size 40 to 210)
	eyelet bolt (with pump size 280 to 1300)
39	hexagon nut
40	ball valve
41	key
42	straight pin
46	screw plug
47	screw plug
48	stop screw
49	screw plug
50	lubricating nipple
51	socket head cap screw
52	socket head cap screw
53	socket head cap screw
54	socket head cap screw
55	socket head cap screw
80	spacer ring
81	support ring
82	spring dowel
83 ①	mechanical seal

① spare parts

Sectional drawing

SMS... - vertical pedestal mounted pump, internal ball bearing, with mechanical seal, design U...
internal ball bearing, with stuffing box, design U2
internal ball bearing, with shaft sealing rings, design U3

Section E-F

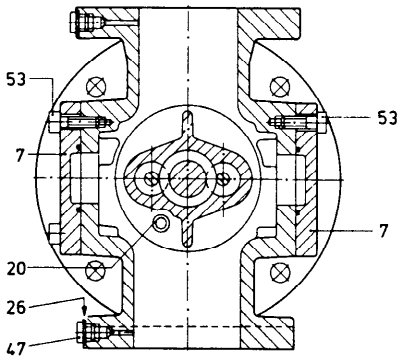

Design U...
with mechanical seal

Design U2

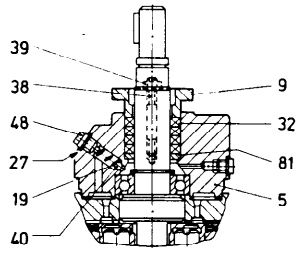

Section A-B

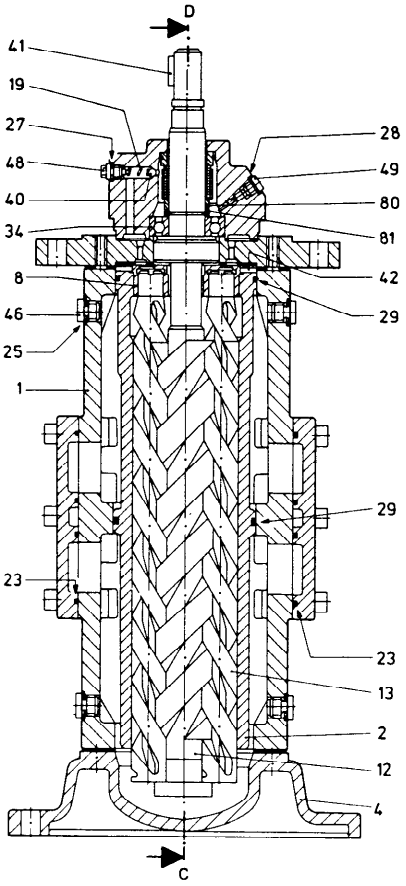

Section C-D

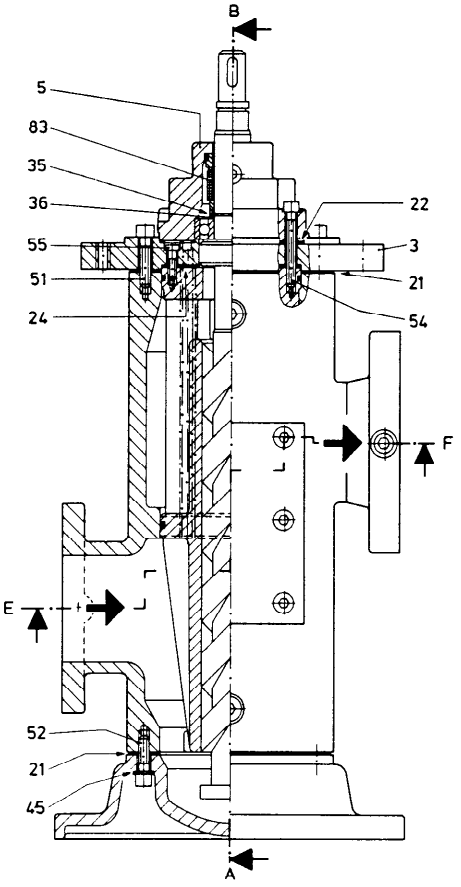

Design U3

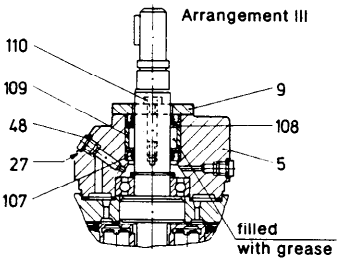

Arrangement of shaft seal rings

arrangement I against suction head
arrangement II against suction lift
arrangement III against suction head and suction lift

Design U... with mechanical seal at pump size 940 to 1300

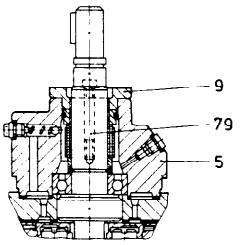

Part No.	Denomination
1	pump casing
2 ①	pump casing insert
3	pump cover, drive side
4	round pump foot
5	shaft sealing housing
7	pump casing cover
8 ①	balance bush
9	seal cover gland (only with design U2)
12 ①	driving spindle
13 ①	idler spindle
19	valve spring
20	balance pipe
21 ①	gasket
22 ①	gasket
23 ①	O-ring
24 ①	gasket
25 ①	joint washer

Part No.	Denomination
26 ①	joint washer
27 ①	joint washer
28 ①	joint washer
29 ①	O-ring
32 ①	gland packing ring
34 ①	groove ball bearing
35	circlip
36	supporting washer
38	stud bolt
39	hexagon nut
40	ball valve
41	key
42	straight pin
45	lock washer
46	screw plug
47	screw plug
48	stop screw screw plug (only with design U3)

Part No.	Denomination
49	screw plug
51	socket head cap screw
52	socket head cap screw
53	socket head cap screw
54	socket head cap screw
55	socket head cap screw
79	socket head cap screw
80	spacer ring
81	supporting washer support ring (only with design U2)
83 ①	mechanical seal
107 ①	shaft seal ring
108	supporting ring
109	spacer bush
110	hexagon screw

① spare parts

Sectional drawing
SMS... - vertical pedestal mounted pump, external ball bearing, with mechanical seal, design D... and E...
external ball bearing, with stuffing box, design KA2

Section E-F

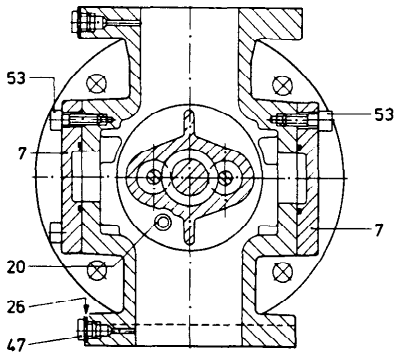

Design D...

Design E..
bearing with grease nipple

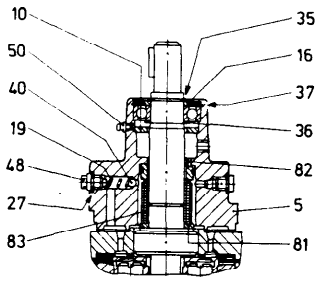

Section A-B

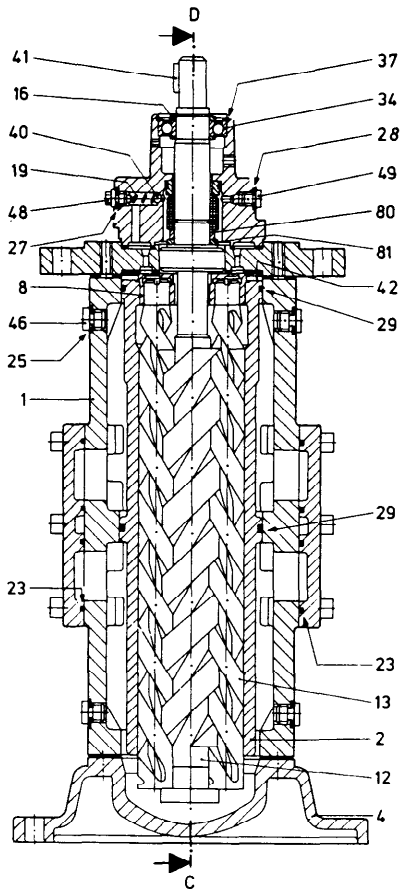

Section C-D

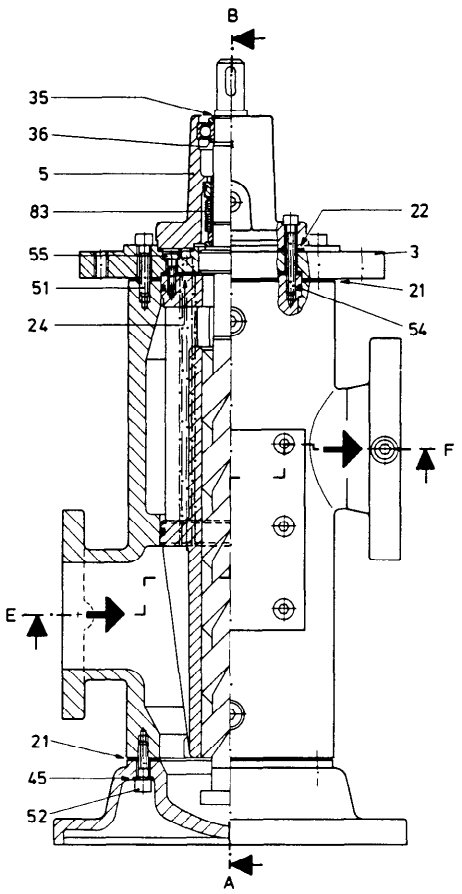

Design KA2

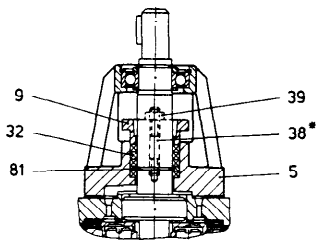

* Up to pump size 210 with stud bolt, part No. 38. Pump size 280 to 1300 with eyelet bolt, part No. 38, and spring dowel, part No. 82 (not shown in the drawing)

Design KA2
at pump size 40

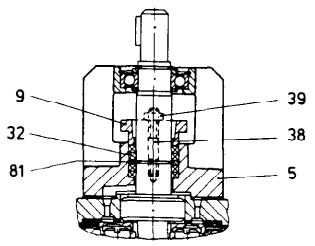

Part No.	Denomination
1	pump casing
2 ①	pump casing insert
3	pump cover, drive side
4	round pump foot
5	bearing housing
7	pump casing cover
8 ①	balance bush
9	gland
10	greasing chamber disc
12 ①	driving spindle
13 ①	idler spindle
16	spacer bush
	labyrinth ring (only with design E)
19	valve spring
20	balance pipe
21 ①	gasket
22 ①	gasket
23 ①	O-ring

Part No.	Denomination
24 ①	gasket
25 ①	joint washer
26 ①	joint washer
27 ①	joint washer
28 ①	joint washer
29 ①	O-ring
32 ①	gland packing ring
34 ①	groove ball bearing
35	circlip
36	supporting washer
37	circlip
38	stud bolt (with pump size 40 to 210)
	eyelet bolt (with pump size 280 to 1300)
39	hexagon nut
40	ball valve
41	key
42	straight pin
45	lock washer

Part No.	Denomination
46	screw plug
47	screw plug
48	stop screw
49	screw plug
50	lubricating nipple
51	socket head cap screw
52	socket head cap screw
53	socket head cap screw
54	socket head cap screw
55	socket head cap screw
80	spacer ring
81	support ring
82	spring dowel
83 ①	mechanical seal

① spare parts

Sectional drawing
SME..., SMEF... - cartridge unit pump, internal ball bearing, with mechanical seal, design U...
internal ball bearing, with stuffing box, design U2
internal ball bearing, with shaft sealing rings, design U3

Design U... with mechanical seal

Section A-B

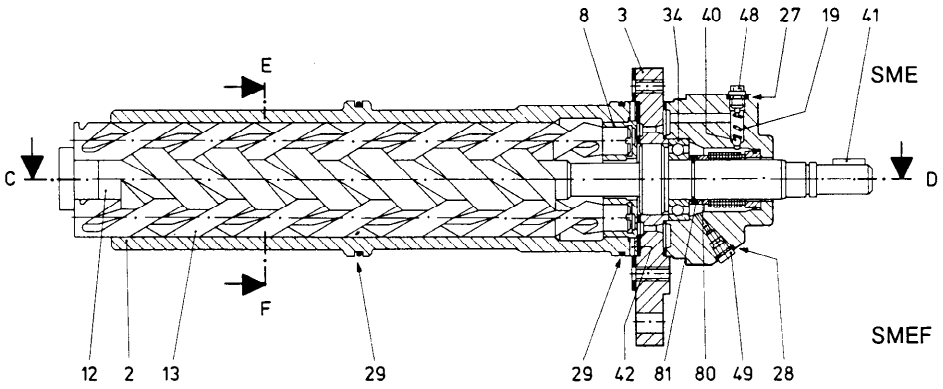

Section E-F

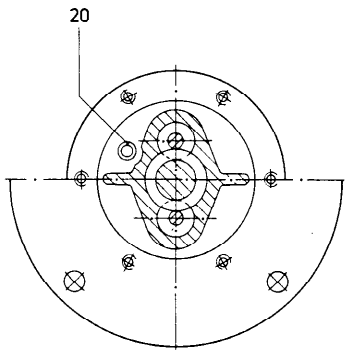

Section C-D

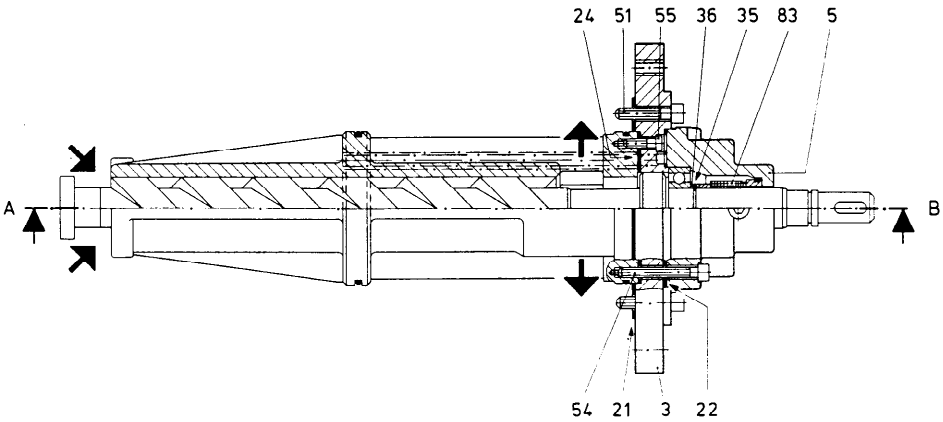

Design U2

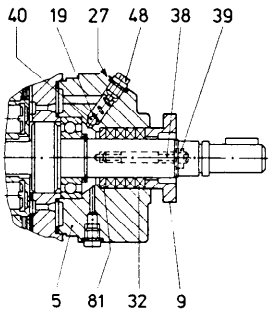

Design U3

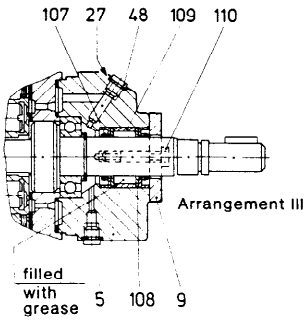

Arrangement of shaft seal rings

arrangement I against suction head
arrangement II against suction lift
arrangement III against suction head and suction lift

Design U... with mechanical seal at pump size 940 to 1300

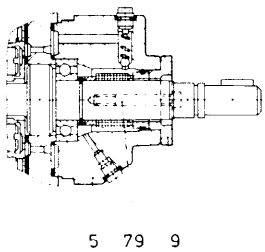

Part No.	Denomination
2 ①	pump casing insert
3	pump cover, drive side
5	shaft sealing housing
8 ①	balance bush
9	seal cover gland (only with design U2)
12 ①	driving spindle
13 ①	idler spindle
19	valve spring
20	balance pipe
21 ①	gasket
22 ①	gasket
24 ①	gasket
27 ①	joint washer
28 ①	joint washer
29 ①	O-ring
32 ①	gland packing ring
34 ①	groove ball bearing
35	circlip
36	supporting washer
38	stud bolt
39	hexagon nut
40	ball valve
41	key
42	straight pin
48	stop screw screw plug (only with design U3)
49	screw plug
51	socket head cap screw

Part No.	Denomination
54	socket head cap screw
55	socket head cap screw
79	socket head cap screw
80	spacer ring
81	supporting washer support ring (only with design U2)
83 ①	mechanical seal
107 ①	shaft seal ring
108	supporting ring
109	spacer bush
110	hexagon screw

① spare parts

Sectional drawing
SME..., SMEF... - cartridge unit pump, external ball bearing, with mechanical seal, design D... and E...
external ball bearing, with stuffing box, design KA2

Design D...

Section A-B

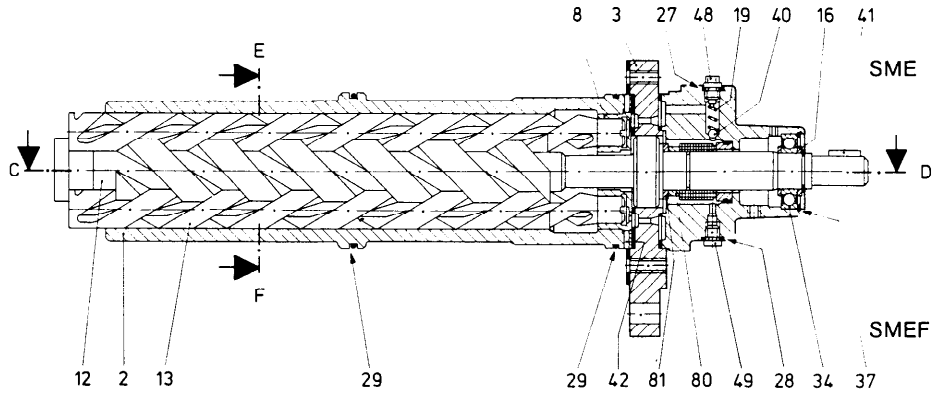

Section E-F

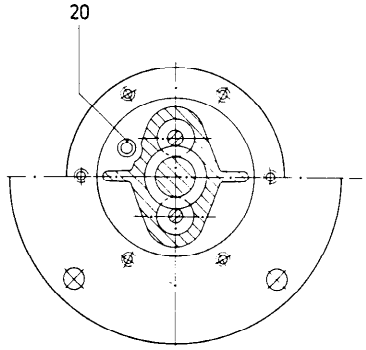

Section C-D

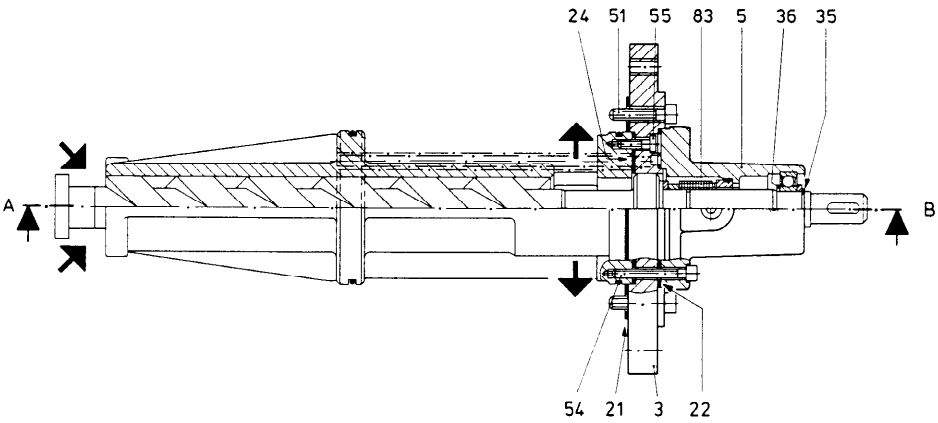

Design E...
bearing with grease nipple

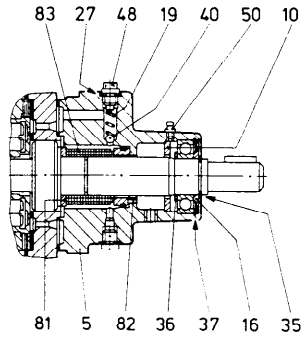

Design KA2

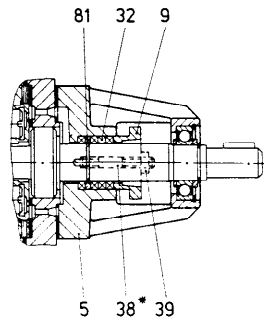

* Up to pump size 210 with stud bolt, part No. 38. Pump size 280 to 1300 with eyelet bolt, part No. 38, and spring dowel, part No. 82 (not shown in the drawing)

Design KA2
at pump size 40

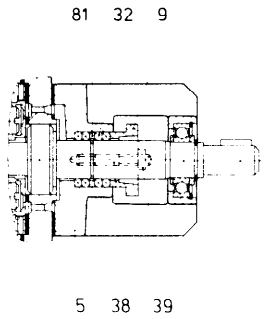

Part No.	Denomination
2 ①	pump casing insert
3	pump cover, drive side
5	bearing housing
8 ①	balance bush
9	gland
10	greasing chamber disc
12 ①	driving spindle
13 ①	idler spindle
16	spacer bush
	labyrinth ring (only with design E)
19	valve spring
20	balance pipe
21 ①	gasket
22 ①	gasket
24 ①	gasket
27 ①	joint washer
28 ①	joint washer
29 ①	O-ring
32 ①	gland packing ring
34 ①	groove ball bearing
35	circlip
36	supporting washer
37	circlip
38	stud bolt (with pump size 40 to 210)
	eyelet bolt (with pump size 280 to 1300)
39	hexagon nut
40	ball valve
41	key
42	straight pin

Part No.	Denomination
48	stop screw
49	screw plug
50	lubricating nipple
51	socket head cap screw
54	socket head cap screw
55	socket head cap screw
80	spacer ring
81	support ring
82	spring dowel
83 ①	mechanical seal

① spare parts

Pump dimensions – not valid for fabricated design

SMH... - horizontal foot mounted pump, internal ball bearing, with mechanical seal, design U...
internal ball bearing, with stuffing box, design U2...
internal ball bearing, with shaft sealing rings, design U3 and U4
external ball bearing, with mechanical seal, design D... and E...
external ball bearing, with stuffing box, design KA2

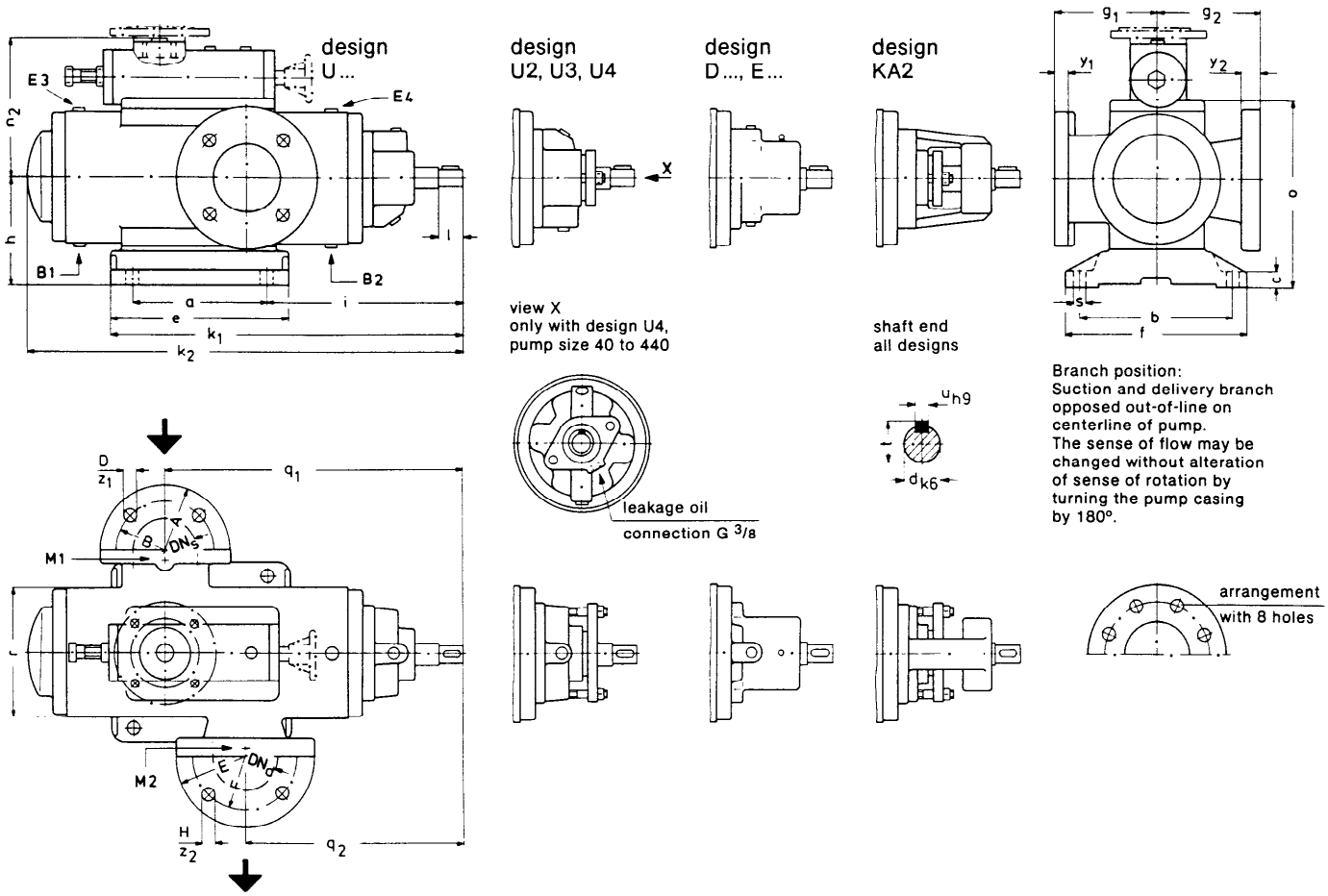

z_1/z_2 = No. of holes

Valve dimensions and connections:
with built-on pump type see dimension leaflet VM 618 GB/...2005, page 27
for pipeline installation see dimension leaflet VM 618 GB/...2006, page 28

Sense of rotation:
clockwise seen from drive side

Dimensions in mm
Alteration of dimensions reserved

pump size	pump dimensions								foot dimensions							shaft end			
	h	k_1	k_2	① n_2	o	q_1	q_2	r	a	b	c	e	f	i	s	d	l	t	u
40	118	380	464	175	204	315	250	130	140	180	15	190	210	215	14	19	34	21,5	6
80	140	449	548	192	248	419	289	156	140	190	18	210	225	274	18	19	45	21,5	6
120	150	500	613	202	268	460	360	185	140	190	18	210	225	325	18	24	54	27,0	8
210	160	538	724	212	288	508	388	205	140	190	18	210	225	363	18	28	60	31,0	8
280	190	612	777	247	334	552	402	220	205	300	30	280	350	370	18	32	60	35,0	10
440	200	694	893	256	354	657	457	245	205	300	30	280	350	452	18	38	72	41,0	10
660	215	770	1025	307	384	720	550	270	205	300	30	280	350	528	18	42	95	45,0	12
940	225	791	1154	317	404	761	531	294	205	300	30	280	350	549	18	48	105	51,5	14
1300	250	875	1230	387	462	795	555	316	310	350	35	400	410	520	23	48	105	51,5	14

① max. dimension with by-pass valve, may be smaller each acc. to valve type. For return valves see dimension leaflet VM 618 GB/...2005, page 27

pump size	suction flange PN 16 DIN EN 1092-2, form B							delivery flange PN 100 DIN 2547, form B							connections		
	nom. diam. DN_s	A	B	D	g_1	y_1	z_1	nom. diam. DN_d	E	F	H	g_2	y_2	z_2	drainage B1/B2	venting E3/E4	pressure gauge M1/M2
40	32	140	100	19	110	18	4	25	140	100	18	110	24	4	G 1/4	G 1/4	G 1/4
80	65	185	145	19	125	20	4	40	170	125	23	125	26	4	G 1/4	G 1/4	G 1/4
120	65	185	145	19	140	20	4	50	195	145	27	140	28	4	G 3/8	G 3/8	G 1/4
210	80	200	160	19	155	22	8	65	220	170	27	155	30	8	G 1/2	G 1/2	G 1/4
280	100	220	180	19	195	24	8	80	230	180	27	195	32	8	G 3/4	G 3/4	G 1/2
440	125	250	210	19	200	26	8	100	265	210	30	200	36	8	G 3/4	G 3/4	G 1/2
660	125	250	210	19	200	26	8	100	265	210	30	200	36	8	G 3/4	G 3/4	G 1/2
940	150	285	240	23	220	26	8	125	315	250	33	220	40	8	G 3/4	G 3/4	G 1/2
1300	150	285	240	23	240	26	8	125	315	250	33	240	40	8	G 3/4	G 3/4	G 1/2

Pump dimensions – not valid for fabricated design

SMF... - flange mounted pump, internal ball bearing, with mechanical seal, design U...
internal ball bearing, with stuffing box, design U2...
internal ball bearing, with shaft sealing rings, design U3 and U4
external ball bearing, with mechanical seal, design D... and E...
external ball bearing, with stuffing box, design KA2

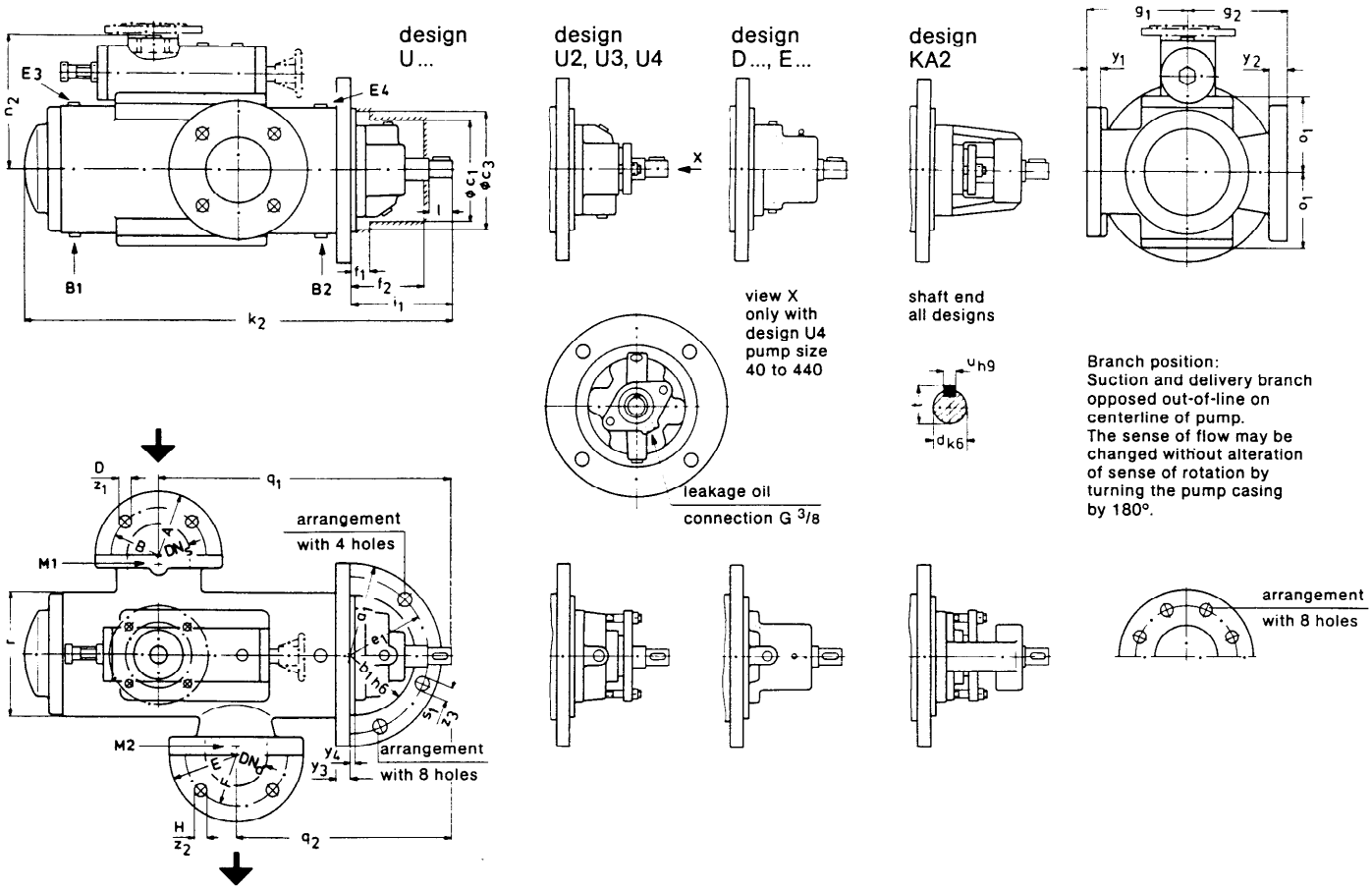

$z_1/z_2/z_3$ = No. of holes

Valve dimensions and connections:
with built-on pump type see dimension leaflet VM 618 GB/...2005, page 27
for pipeline installation see dimension leaflet VM 618 GB/...2006, page 28

Sense of rotation:
clockwise seen from drive side

Dimensions in mm
Alteration of dimensions reserved

pump size	pump dimensions						flange cover												shaft end			
	k_2	① n_2	o_1	q_1	q_2	r	a_1	b_1	② c_1	② c_3	e_1	② f_1	② f_2	i_1	s_1	y_3	y_4	z_3	d	l	t	u
40	464	175	87	315	250	130	190	130	130	130	160	20	95	130	13,5	20	4,5	4	19	34	21,5	6
80	548	192	108	419	289	156	230	155	153	153	190	21	92	138	17,5	20	6,0	4	19	45	21,5	6
120	613	202	118	460	360	185	260	185	163	175	220	23	113	168	17,5	22	6,0	4	24	54	27,0	8
210	724	212	128	508	388	205	290	205	172	198	250	23	120	181	17,5	24	7,0	4	28	60	31,0	8
280	777	247	144	552	402	220	310	220	175	209	260	27	134	195	22,0	27	6,0	4	32	60	35,0	10
440	893	256	154	657	457	245	360	250	208	234	310	27	136	209	26,0	30	6,0	4	38	72	41,0	10
660	1025	307	169	720	550	270	380	270	227	259	320	27	143	239	26,0	30	6,0	4	42	95	45,0	12
940	1154	317	179	761	531	294	400	290	241	287	350	31	145	251	22,0	30	6,0	8	48	105	51,5	14
1300	1230	387	212	795	555	316	410	310	259	307	360	33	161	267	22,0	32	8,0	8	48	105	51,5	14

① max. dimension with by-pass valve, may be smaller each acc. to valve type. For return valves see dimension leaflet VM 618 GB/...2005, page 27
② Space to be kept free for assembling.

pump size	suction flange PN 16 DIN EN 1092-2, form B							delivery flange PN 100 DIN 2547, form B							connections		
	nom. diam. DN_s	A	B	D	g_1	y_1	z_1	nom. diam. DN_d	E	F	H	g_2	y_2	z_2	drainage B1/B2	venting E3/E4	pressure gauge M1/M2
40	32	140	100	19	110	18	4	25	140	100	18	110	24	4	G 1/4	G 1/4	G 1/4
80	65	185	145	19	125	20	4	40	170	125	23	125	26	4	G 1/4	G 1/4	G 1/4
120	65	185	145	19	140	20	4	50	195	145	27	140	28	4	G 3/8	G 3/8	G 1/4
210	80	200	160	19	155	22	8	65	220	170	27	155	30	8	G 1/2	G 1/2	G 1/4
280	100	220	180	19	195	24	8	80	230	180	27	195	32	8	G 3/4	G 3/4	G 1/2
440	125	250	210	19	200	26	8	100	265	210	30	200	36	8	G 3/4	G 3/4	G 1/2
660	125	250	210	19	200	26	8	100	265	210	30	200	36	8	G 3/4	G 3/4	G 1/2
940	150	285	240	23	220	26	8	125	315	250	33	220	40	8	G 3/4	G 3/4	G 1/2
1300	150	285	240	23	240	26	8	125	315	250	33	240	40	8	G 3/4	G 3/4	G 1/2

Pump dimensions – not valid for fabricated design

SMS... - Vertical pedestal mounted pump, internal ball bearing, with mechanical seal, design U...
internal ball bearing, with stuffing box, design U2...
internal ball bearing, with shaft sealing rings, design U3 and U4
external ball bearing, with mechanical seal, design D... and E...
external ball bearing, with stuffing box, design KA2

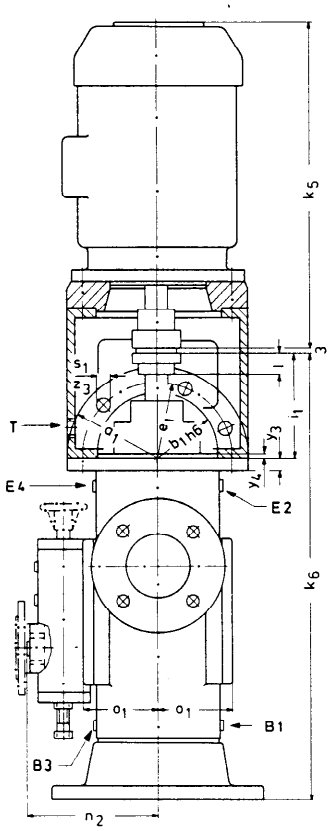

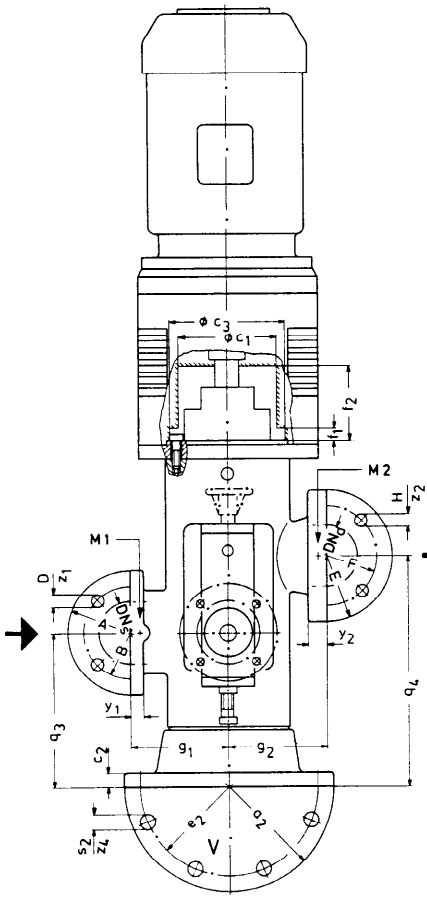

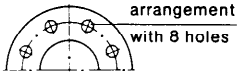

Branch position:
Suction and delivery branch opposed out-of-line on centerline of pump.
The sense of flow may be changed without alteration of sense of rotation by turning the pump casing by 180°.

shaft end
all designs

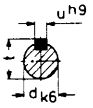

screw arrangement at pump foot for:
I = SMS 40 ③
III = SMS 80 to 210
IV = SMS 80 to 210 with intermediary ④⑤⑥
V = SMS 280 to 940
VI = SMS 1300

Sense of rotation:
clockwise seen from drive side

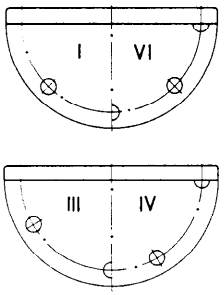

$z_1/z_2/z_3/z_4$ = No. of holes

Valve dimensions and connections:
with built-on pump type see dimension leaflet VM 618 GB/...2005, page 27
for pipeline installation see dimension leaflet VM 618 GB/...2006, page 28

Dimensions in mm. Alteration of dimensions reserved

standard motors			
IEC size	k_5 appr.	IEC size	k_5 appr.
71	240	180 M	650
80	275	180 L	690
90 S	305	200 L	735
90 L	330	225 S	810
100 L	365	225 M	835
112 M	380	250 M	940
132 S	445	280 S	1000
132 M	485	280 M	1050
160 M	585	315 S	1140
160 L	630	315 M	1200

pump size	pump dimensions					flange cover												foot dimensions					shaft end			
	k_6	① n_2	o_1	q_3	q_4	a_1	b_1	② c_1	② c_3	e_1	② f_1	② f_2	i_1	s_1	y_3	y_4	z_3	a_2	c_2	e_2	s_2	z_4	d	l	t	u
40	486,0③	175	87	171,0③	236,0③	190	130	130	130	160	20	95	130	13,5	20	4,5	4	250	22	220	14	4	19	34	21,5	6
80	576,0④	192	108	157,0④	287,0④	230	155	153	153	190	21	92	138	17,5	20	6,0	4	280	23	240	18	6	19	45	21,5	6
120	632,0⑤	202	118	172,0⑤	272,0⑤	260	185	163	175	220	23	113	168	17,5	22	6,0	4	320	25	280	18	6	24	54	27,0	8
210	727,0⑥	212	128	218,5⑥	338,5⑥	290	205	172	198	250	23	120	181	17,5	24	7,0	4	340	25	300	18	6	28	60	31,0	8
280	887,5	247	144	335,5	485,5	310	220	175	209	260	27	134	195	22,0	27	6,0	4	400	30	360	18	8	32	60	35,0	10
440	967,0	256	154	310,0	510,0	360	250	208	234	310	27	136	209	26,0	30	6,0	4	420	35	380	18	8	38	72	41,0	10
660	1065	307	169	345,0	515,0	380	270	227	259	320	27	143	239	26,0	30	6,0	4	480	35	440	18	8	42	95	45,0	12
940	1193	317	179	432,0	662,0	400	290	241	287	350	31	145	251	22,0	30	6,0	8	510	40	460	18	8	48	105	51,5	14
1300	1284	387	212	489,0	729,0	410	310	259	307	360	33	161	267	22,0	32	8,0	8	560	35	500	23	8	48	105	51,5	14

① max. dimension with by-pass valve, may be smaller each according to valve type. For return valves see dimension leaflet VM 618 GB/...2005, page 27
② Space to be kept free for assembling.

③ at SMS 40 with valve DVI 38: dimension k_6 = 546,5, q_3 = 231,5 and q_4 = 296,5; screw arrangement at foot = I
④ at SMS 80 with valve DVI 38: dimension k_6 = 631,5, q_3 = 212,5 and q_4 = 342,5; screw arrangement at foot = IV
⑤ at SMS 120 with valve DVI 38: dimension k_6 = 718,5, q_3 = 258,5 and q_4 = 358,5; screw arrangement at foot = IV
⑥ at SMS 210 with valve DVI 38: dimension k_6 = 795,5, q_3 = 287,0 and q_4 = 407,0; screw arrangement at foot = IV
The deviating dimensions as well as the screws of foot are caused by the necessary intermediary

pump size	suction flange PN 16 DIN EN 1092-2, form B							delivery flange PN 100 DIN 2547, form B							connections			
	nom. diam. DN_s	A	B	D	g_1	y_1	z_1	nom. diam. DN_d	E	F	H	g_2	y_2	z_2	drainage B1/B3	venting E2/E4	pressure gauge M1/M2	leakage oil T
40	32	140	100	19	110	18	4	25	140	100	18	110	24	4	G 1/4	G 1/4	G 1/4	G 1/4
80	65	185	145	19	125	20	4	40	170	125	23	125	26	4	G 1/4	G 1/4	G 1/4	G 1/4
120	65	185	145	19	140	20	4	50	195	145	27	140	28	4	G 3/8	G 3/8	G 1/4	G 3/8
210	80	200	160	19	155	22	8	65	220	170	27	155	30	8	G 1/2	G 1/2	G 1/4	G 3/8
280	100	220	180	19	195	24	8	80	230	180	27	195	32	8	G 3/4	G 3/4	G 1/2	G 1/2
440	125	250	210	19	200	26	8	100	265	210	30	200	36	8	G 3/4	G 3/4	G 1/2	G 1/2
660	125	250	210	19	200	26	8	100	265	210	30	200	36	8	G 3/4	G 3/4	G 1/2	G 1/2
940	150	285	240	23	220	26	8	125	315	250	33	220	40	8	G 3/4	G 3/4	G 1/2	G 1/2
1300	150	285	240	23	240	26	8	125	315	250	33	240	40	8	G 3/4	G 3/4	G 1/2	G 1/2

Pump dimensions

SME..., SMEF... - cartridge unit pump, internal ball bearing, with mechanical seal, design U...
internal ball bearing, with stuffing box, design U2...
internal ball bearing, with shaft sealing rings, design U3 and U4
external ball bearing, with mechanical seal, design D... and E...
external ball bearing, with stuffing box, design KA2

SME

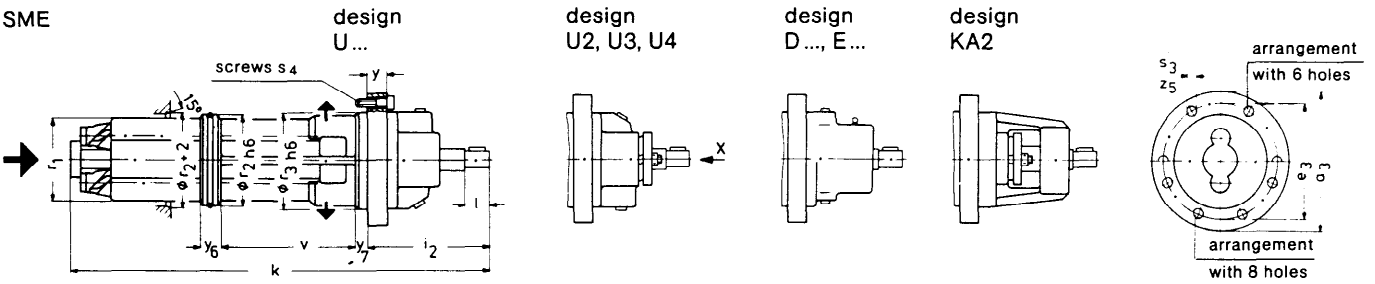

SMEF

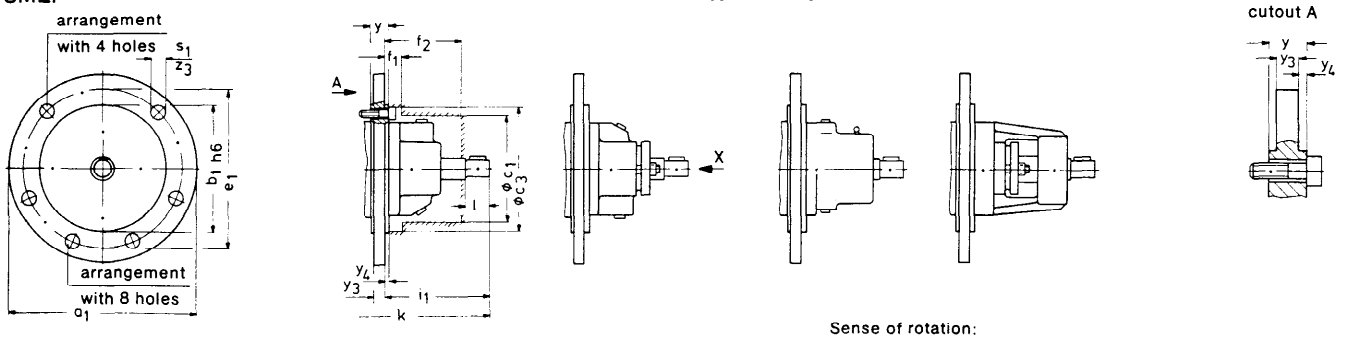

z_5 = No. of holes

Sense of rotation: clockwise seen from drive side

Dimensions in mm
Alteration of dimensions reserved

pump size	pump dimensions								mounting flange					
	i_2	k	r_1	r_2	r_3	v	y_6	y_7	a_3	e_3	s_3	s_4	y ①	z_5
40	150,5	445	82	85	86	116	18	12	128	105	12,0	M 10	14,0	6
80	169,0	508	100	105	106	163	20	16	152	130	12,0	M 10	16,5	6
120	195,5	579	112	120	121	177	23	20	182	152	14,5	M 12	19,0	6
210	213,5	670	128	140	141	197	25	21	203	175	14,5	M 12	21,0	6
280	229,5	732	138	147	148	209	28	23	217	180	18,5	M 16	22,5	6
440	257,0	835	156	171	172	258	30	25	243	205	18,5	M 16	25,0	8
660	294,0	959	180	191	192	289	35	30	266	230	18,5	M 16	28,0	8
940	310,0	1064	200	214	215	292	35	30	290	250	24,0	M 20	31,0	8
1300	318,0	1154	216	235	236	305	40	34	310	272	24,0	M 20	34,0	8

① stated dimensions without gasket.

pump size	flange cover (only with series SMEF)													shaft end			
	a_1	b_1	② c_1	② c_3	e_1	② f_1	② f_2	i_1	s_1	y	y_3	y_4	z_3	d	l	t	u
40	190	130	130	130	160	20	95	130	13,5	24,5	20	4,5	4	19	34	21,5	6
80	230	155	153	153	190	21	92	138	17,5	36,5	20	6,0	4	19	45	21,5	6
120	260	185	163	175	220	23	113	168	17,5	34,0	22	6,0	4	24	54	27,0	8
210	290	205	172	198	250	23	120	181	17,5	39,0	24	7,0	4	28	60	31,0	8
280	310	220	175	209	260	27	134	195	22,0	39,5	27	6,0	4	32	60	35,0	10
440	360	250	208	234	310	27	136	209	26,0	53,0	30	6,0	4	38	72	41,0	10
660	380	270	227	259	320	27	143	239	26,0	60,0	30	6,0	4	42	95	45,0	12
940	400	290	241	287	350	31	145	251	22,0	69,0	30	6,0	8	48	105	51,5	14
1300	410	310	259	307	360	33	161	267	22,0	58,0	32	8,0	8	48	105	51,5	14

② Space to be kept free for assembling.

Heating – not valid for fabricated design

Series SMH, SMF, SMS, design ...E = with heating elements for electrical heating
design ...P = with heating cartridges for steam or heat conveyors
design ...X = with heating cover for steam or heat conveyors

Design ... E (with 2 heating elements, electrical)

SMH/SMF 40 to 1300

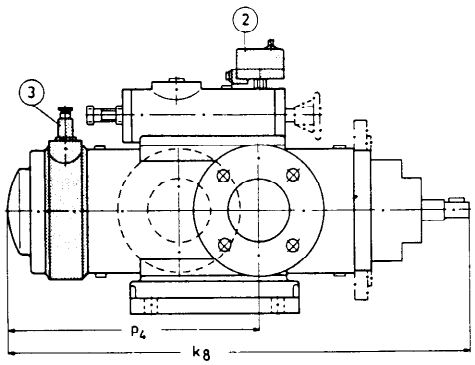

SMS 40 to 1300

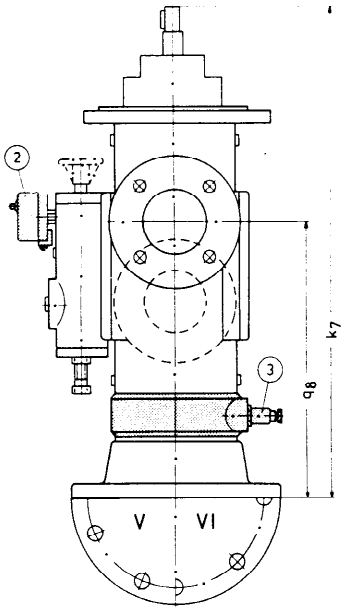

screw arrangement at pump foot for:
II = SMS 40
IV = SMS 80 to 210
V = SMS 280 to 940
VI = SMS 1300

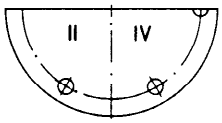

Switch diagram

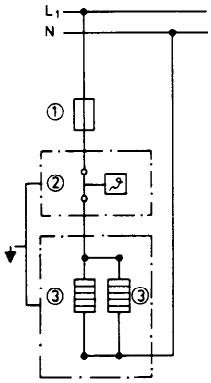

① fuse
② thermostat (control range 0 up to 150°C)
③ heating elements 230 V, 50 Hz

Design ... X (with heating cover)

SMH/SMF 40 to 1300

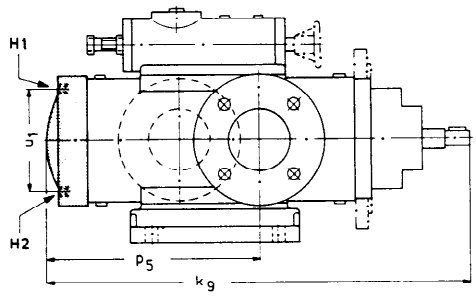

Design ... P (with 2 heating cartridges, steam/heat conveyor)

SMS 40 to 1300

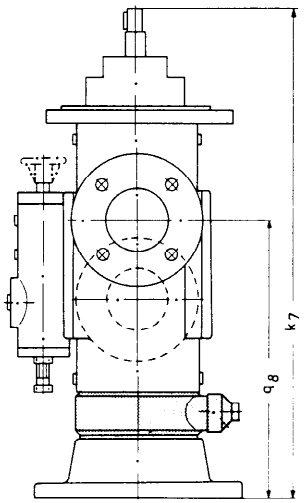

Connection cartridge

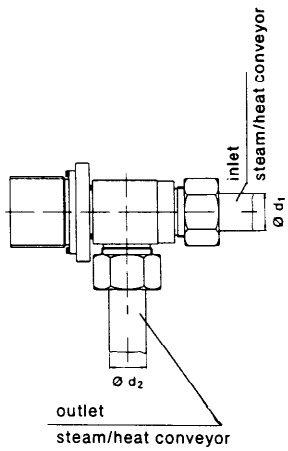

Dimensions in mm
Alteration of dimensions reserved

pump size	pump dimensions ④							heating steam/heat conveyor		heating (electrical								
										total heat capacity (2 elements)	heating elements 230 V, 50 Hz				heating up time of pump in minutes at Δt =			
	k_7	k_8	k_9	p_4	p_5	q_8	u_1	H1/H2	pipe d_1/d_2	W	length	Ø	connec-tion	key width	25°C	50°C	75°C	100°C
40	546,5	524,5	484	274,5	234	296,5	100	G 1/4	18	240	130	20	G 3/4	32				
80	631,5	603,5	567	314,5	278	342,5	120	G 1/4	18	260	150	20	G 3/4	32				
120	718,5	699,5	631	339,5	271	358,5	145	G 1/4	18	300	170	20	G 3/4	32				
210	795,5	792,5	748	404,5	360	407,0	170	G 1/4	18	420	190	25	G 1	41				
280	978,5	868,0	800	466,0	398	576,5	175	G 3/8	18	460	210	25	G 1	41	60	120	240	320
440	1028	954,0	921	497,0	464	571,0	200	G 3/8	18	460	210	25	G 1	41				
660	1141	1101	1050	551,0	500	591,0	225	G 3/8	22	680	240	32	G 1 1/4	60				
940	1279	1240	1176	709,0	645	748,0	244	G 3/8	22	880	250	40	G 1 1/2	60				
1300	1380	1326	1260	771,0	705	825,0	265	G 1/2	22	1000	280	40	G 1 1/2	60				

④ Further pump dimensions see dimension leaflet VM 618 GB/...2000 for SMH, VM 618 GB/...2001 for SMF, VM 618 GB/...2002 for SMS.

Valve dimensions and connections – not valid for fabricated design
Pressure relief valves built-on pumps of series SMH, SMF, SMS
Valve construction in GG (c.i.) and GGG (s.g.c.i.)

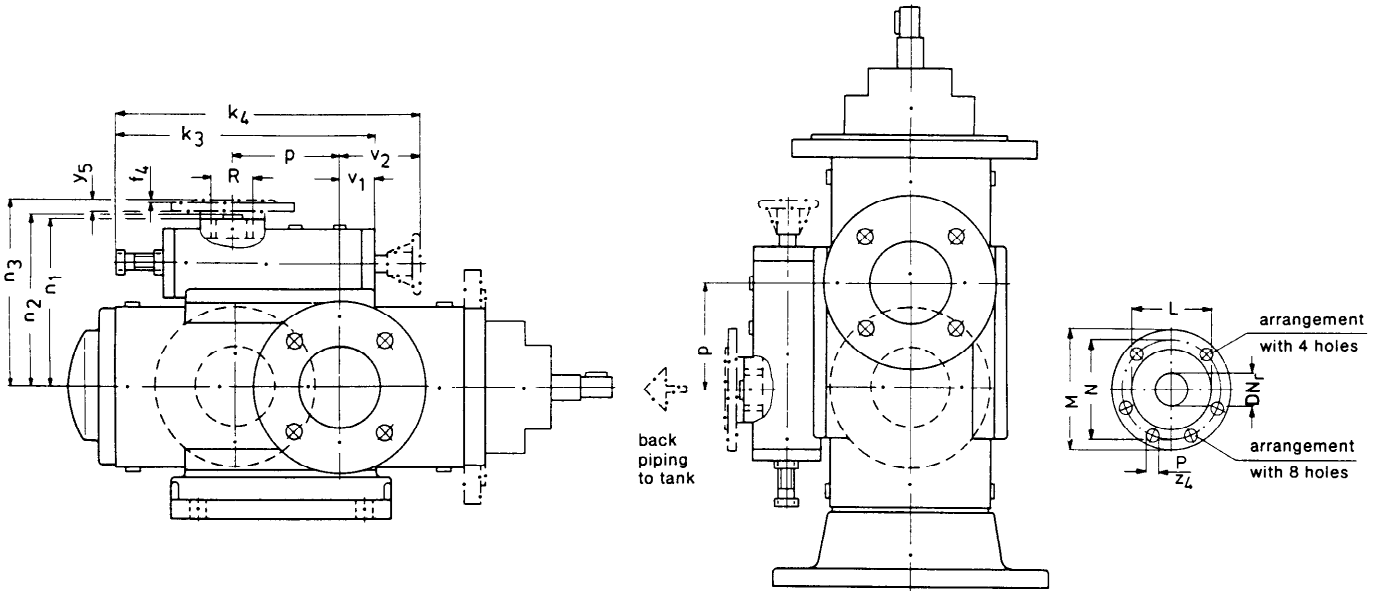

Dimensions in mm. Alteration of dimensions reserved

z_4 = No. of holes

pump size SM..	max. permissible discharge flow-through l/min	max. permissible working pressure ③ bar	valve type ①	valve design ②	valve dimensions k_3	k_4	p	v_1	v_2	additional dimensions at: by-pass n_2	back piping connections pipe thread n_1	R	PN 16 DIN EN 1092-2 n_3	DN_r
40	210	0-38	DS 41	A B C D	198	245	55	45	76	153	146	G 1	-	-
	550	0-44 0-98	DS 38 DVI 38⑤	A B C D	261 300	292 340	79	45	86	175	168	G 1 1/2	-	-
80	210	0-38	DS 41	A B C D	198	245	75	25	56	170	163	G 1	-	-
	550	0-44 0-98	DS 38 DVI 38⑤	A B C D	261 300	292 340	99	25	66	192	185	G 1 1/2	-	-
120	210	0-38	DS 41	A B C D	198	245	55	45	76	180	173	G 1	-	-
	550	0-44 0-98	DS 38 DVI 38⑤	A B C D	261 300	292 340	79	45	86	202	195	G 1 1/2	-	-
210	210	0-38	DS 41	A B C D	198	245	65	35	65	190	183	G 1	-	-
	550	0-44 0-98	DS 38 DVI 38⑤	A B C D	261 300	292 340	89	35	76	212	205	G 1 1/2	-	-
280	900	0-13,5 13,5-38	DS 44 DT 44	A B C D	362 402	410 450	135	50	98	247	-	-	270	65
		0-98	DV 44 DVI 44 DVS44	- B - D	384 384 -	④ ④ 360	135	50 50 -	④ ④ 55	247	-	-	270	65
440	900	0-13,5 13,5-38	DS 44 DT 44	A B C D	362 402	410 450	162	23	71	256	-	-	279	65
		0-98	DV 44 DVI 44 DVS44	- B - D	384 384 -	④ ④ 360	162	23 23 -	④ ④ 28	256	-	-	279	65
660	900	0-13,5 13,5-38	DS 44 DT 44	A B C D	362 402	410 450	145	40	88	272	-	-	295	65
		0-98	DV 44 DVI 44 DVS44	- B - D	384 384 -	④ ④ 360	145	40 40 -	④ ④ 45	272	-	-	295	65
	1800	0-18	DS 47	A B C D	400	468	145	45	113	307	-	-	350	80
		0-98	DV 47 DVI 47	- B - D	400	468	145	45	113	307	-	-	350	80
940	900	0-13,5 13,5-38	DS 44 DT 44	A B C D	362 402	410 450	185	0	48	282	-	-	305	65
		0-98	DV 44 DVI 44 DVS44	- B - D	384 384 -	④ ④ 360	185	0 0 -	④ ④ 5	282	-	-	305	65
	1800	0-18	DS 47	A B C D	400	468	185	5	73	317	-	-	360	80
		0-98	DV 47 DVI 47	- B - D	400	468	185	5	73	317	-	-	360	80
1300	2500	0-16	DS 50	A B C D	550	620	220	60	130	387	-	-	390	100
		0-98	DV 50 DVI 50 DVS50	- B - D	470 470 -	④ ④ 530	220	60 60 -	④ ④ 150	387	-	-	390	100

flange dimensions (back piping connection) PN 16 DIN EN 1092-2, form C							
DN_r	M	N	L	P	f_4	y_5	z_4
65	185	145	122	19	3	18	4
80	200	160	138	19	3	22	8
100	220	180	158	19	3	22	8

① DS = Pressure relief valve with coil spring, directly operated
DT = Pressure relief valve with disc springs, directly operated
DV = Pressure relief valve directly pilot-operated
DVI = Pressure relief valve indirectly pilot-operated
DVS = Pressure relief valve directly pilot-operated, marine design for vertical pumps

② A = by-pass relief valve
B = by-pass relief valve with manual control
C = return relief valve
D = return relief valve with manual control

③ In the case of differential pressure over 40 bars return valves (type...C and D...) should generally be employed.

④ No dimension because of lateral adjusting screw.

⑤ With the pump types SMS 40, 80, 120 and 210 the valve type DVI 38 only with intermediary (between pump casing and round pump foot) possible.

Valve dimensions and connections – not valid for fabricated design
Pressure relief valves for pipe line installation

valve size 23 to 38

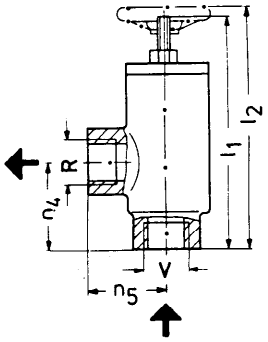

valve size 44

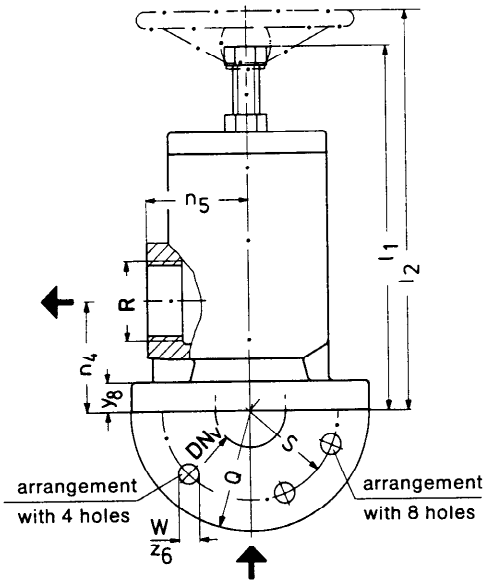

valve size 44 to 56

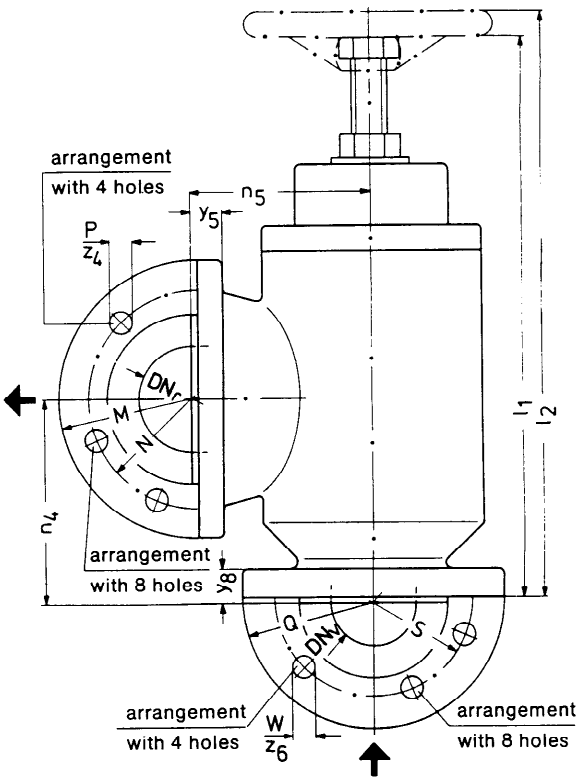

z_4/z_6 = No. of holes

Dimensions in mm. Alteration of dimensions reserved

discharge flow-through from l/min	to l/min	max. perm. working pressure bar	valve type ①	valve design ②	material of casing	valve dimensions l_1	l_2	n_4	n_5	connections inlet (feeding) pipe thread V	nominal diam. DN_v	nominal press. PN	Q	S	W	y_8	z_6	outlet (return) pipe thread R	nominal diam. DN_r	nominal press. PN	M	N	P	y_5	z_4
5	35	0-38	DS23	E F	GG, GGG, St	110	115	40	35	G 3/8	-	-	-	-	-	-	-	G 3/8	-	-	-	-	-	-	-
20	160	0-38	DS29	E F	GG, GGG, St	160	190	62	50	G 1	-	-	-	-	-	-	-	G 1	-	-	-	-	-	-	-
		38-58	DT29	E F	GG, GGG, St	160	190	62	50	G 1	-	-	-	-	-	-	-	G 1	-	-	-	-	-	-	-
50	300	0-44	DS38	E F	GG, GGG, St	230	260	88	57	G1 1/2	-	-	-	-	-	-	-	G1 1/2	-	-	-	-	-	-	-
		0-58	DVI38	E	GG, GGG, St	292	-	88	57	G1 1/2	-	-	-	-	-	-	-	G1 1/2	-	-	-	-	-	-	-
		0-98	DVI38	E	GGG, St	292	-	88	57	G1 1/2	-	-	-	-	-	-	-	G1 1/2	-	-	-	-	-	-	-
100	660	0-13,5	DS44	E F	GG, GGG, GS	255	280	78	70	-	50	40	165	125	18	22	4	G 2	-	-	-	-	-	-	-
		13,5-38	DT44	E F	GG, GGG, GS	300	325	78	70	-	50	40	165	125	18	22	4	G 2	-	-	-	-	-	-	-
		0-38	DV44, DVI44	F	GG, GGG, GS	275	③	78	70	-	50	40	165	125	18	22	4	G 2	-	-	-	-	-	-	-
		0-98	DV44, DVI44	F	St	325	③	132	112	-	50	100	195	145	27	28	4	-	50	16	165	125	18	18	4
200	1300	0-18	DS47	E F	GG, GGG	355	380	140	130	-	65	40	185	145	18	24	8	-	80	16	200	160	18	24	8
					St	380	410	160	160	-	65	40	185	145	18	22	8	-	80	16	200	160	18	20	8
		0-38	DV47, DVI47	F	GG, GGG	335	③	140	130	-	65	40	185	145	18	24	8	-	80	16	200	160	18	24	8
					St	360	③	160	160	-	65	40	185	145	18	22	8	-	80	16	200	160	18	20	8
		0-98	DV47, DVI47	F	St	360	③	160	160	-	65	100	220	170	27	30	8	-	80	16	200	160	18	20	8
400	2200	0-16	DS50	E F	GG	406	440	150	140	-	80	40	200	160	18	26	8	-	100	16	220	180	18	24	8
					St	468	500	200	180	-	80	40	200	160	18	24	8	-	100	16	220	180	18	20	8
		0-38	DV50, DVI50	F	GG	320	③	150	140	-	80	40	200	160	18	26	8	-	100	16	220	180	18	24	8
					St	380	③	200	180	-	80	40	200	160	18	24	8	-	100	16	220	180	18	20	8
		0-98	DV50, DVI50	F	St	380	③	220	180	-	80	100	230	180	27	32	8	-	100	16	220	180	18	20	8
600	3600	0-9	DS56	E F	St	500	520	220	200	-	100	40	235	190	23	24	8	-	125	16	250	210	18	22	8
		0-38	DV56	F	St	400	③	220	200	-	100	40	235	190	23	24	8	-	125	16	250	210	18	22	8
		0-98	DV56	F	St	395	③	240	200	-	100	100	265	210	30	36	8	-	125	16	250	210	18	22	8

① DS = Pressure relief valve with coil spring, directly operated
DT = Pressure relief valve with disc springs, directly operated
DV = Pressure relief valve directly pilot-operated
DVI = Pressure relief valve indirectly pilot-operated

② E = pipe line relief valve without manual control
F = pipe line relief valve with manual control

③ No dimension because of lateral adjusting screw.

Unit dimensions – not valid for fabricated design

SMF... - flange mounted pump, internal ball bearing, with mechanical seal, design U...
internal ball bearing, with stuffing box, design U2...
internal ball bearing, with shaft sealing rings, design U3 and U4
external ball bearing, with mechanical seal, design D... and E...
external ball bearing, with stuffing box, design KA2

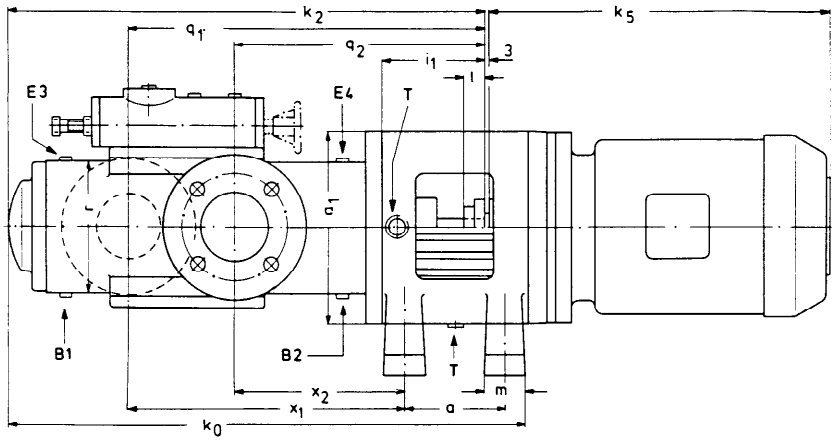

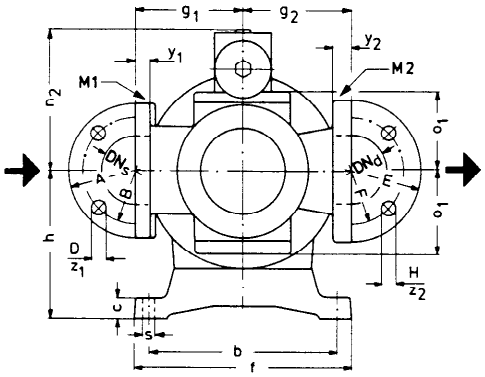

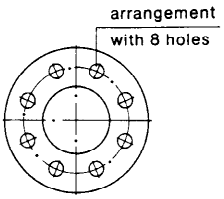

Branch position:
Suction and delivery branch opposed out-of-line on centerline of pump.

The sense of flow may be changed without alteration of sense of rotation by turning the pump casing by 180°.

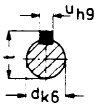

Sense of rotation:
clockwise seen from drive side

standard motors ①			
IEC size	k_5 appr.	IEC size	k_5 appr.
71	240	180 M	650
80	275	180 L	690
90 S	305	200 L	735
90 L	330	225 S	810
100 L	365	225 M	835
112 M	380	250 M	940
132 S	445	280 S	1000
132 M	485	280 M	1050
160 M	585	315 S	1140
160 L	630	315 M	1200

Valve dimensions and connections:
with built-on pump type see dimension leaflet VM 618 GB/...2005, page 27
for pipeline installation see dimension leaflet VM 618 GB/...2006, page 28
Additional dimensions in case of heating see dimension leaflet VM 618 GB/...2004, page 26

Dimensions in mm
Alteration of dimensions reserved

z_1/z_2 = No. of holes

pump size	pump- / unit dimensions ①												foot dimensions						shaft end			
	a_1	h	i_1	k_0	k_2	② n_2	o_1	q_1	q_2	r	x_1	x_2	a	b	c	f	m	s	d	l	t	u
40	190	180	130	530,5	464	175	87	315	250	130	213,0	148,0	140	170	33	207	57	11	19	34	21,5	6
80	230	180	138	611,0	548	192	108	419	289	156	312,0	182,0	140	250	40	315	60	18	19	45	21,5	6
120	260	195	168	668,0	613	202	118	460	360	185	325,0	225,0	160	250	40	315	60	18	24	54	27,0	8
210	290	210	181	777,0	724	212	128	508	388	205	351,0	231,0	180	250	40	315	60	18	28	60	31,0	8
280	310	280	195	862,0	777	247	144	552	402	220	397,0	247,0	180	355	40	410	80	23	32	60	35,0	10
440	360	280	209,	955,5	893	256	154	657	457	245	489,5	289,5	190	355	40	410	80	23	38	72	41,0	10
660	380	290	239	1090,0	1025	307	169	720	550	270	525,0	355,0	220	355	40	410	80	23	42	95	45,0	12
940	400	310	251	1221,0	1154	317	179	761	531	294	553,0	323,0	235	355	40	410	80	23	48	105	51,5	14
1300	410	310	267	1280,5	1230	387	212	795	555	316	570,5	330,5	235	355	40	410	80	23	48	105	51,5	14

① Only valid for three-phase A.C. standard motors with enclosure higher than IP 23. In case of three-phase A.C. standard motors with enclosure IP 23 and for D.C. motors dimensions upon request.
② max. dimension with by-pass valve, may be smaller each according to valve type. For return valves see dimension leaflet VM 618 GB/...2005, page 27

pump size	suction flange PN 16 DIN EN 1092-2, form B							delivery flange PN 100 DIN 2547, form B							connections			
	nom. diam. DN_s	A	B	D	g_1	y_1	z_1	nom. diam. DN_d	E	F	H	g_2	y_2	z_2	drainage B1/B2	venting E3/E4	pressure gauge M1/M2	leakage oil T
40	32	140	100	19	110	18	4	25	140	100	18	110	24	4	G 1/4	G 1/4	G 1/4	G 1/4
80	65	185	145	19	125	20	4	40	170	125	23	125	26	4	G 1/4	G 1/4	G 1/4	G 1/4
120	65	185	145	19	140	20	4	50	195	145	27	140	28	4	G 3/8	G 3/8	G 1/4	G 3/8
210	80	200	160	19	155	22	8	65	220	170	27	155	30	8	G 1/2	G 1/2	G 1/4	G 3/8
280	100	220	180	19	195	24	8	80	230	180	27	195	32	8	G 3/4	G 3/4	G 1/2	G 1/2
440	125	250	210	19	200	26	8	100	265	210	30	200	36	8	G 3/4	G 3/4	G 1/2	G 1/2
660	125	250	210	19	200	26	8	100	265	210	30	200	36	8	G 3/4	G 3/4	G 1/2	G 1/2
940	150	285	240	23	220	26	8	125	315	250	33	220	40	8	G 3/4	G 3/4	G 1/2	G 1/2
1300	150	285	240	23	240	26	8	125	315	250	33	240	40	8	G 3/4	G 3/4	G 1/2	G 1/2

Installation plan – not valid for fabricated design

SMH... - horizontal foot mounted pump, internal ball bearing, with mechanical seal, design U...
internal ball bearing, with stuffing box, design U2...
internal ball bearing, with shaft sealing rings, design U3 and U4
external ball bearing, with mechanical seal, design D... and E...
external ball bearing, with stuffing box, design KA2

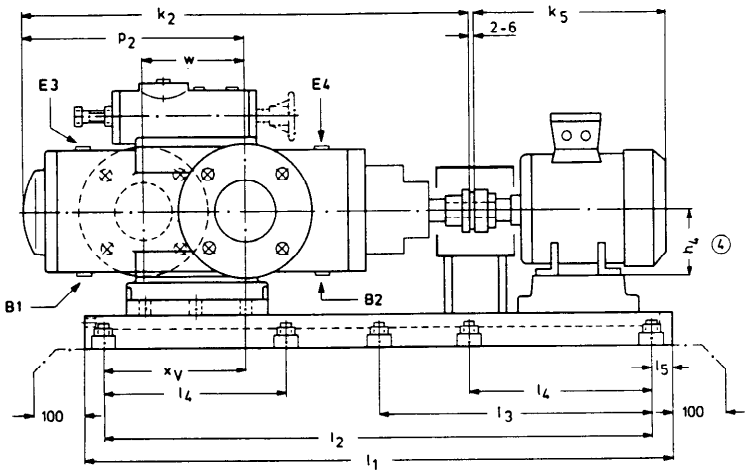

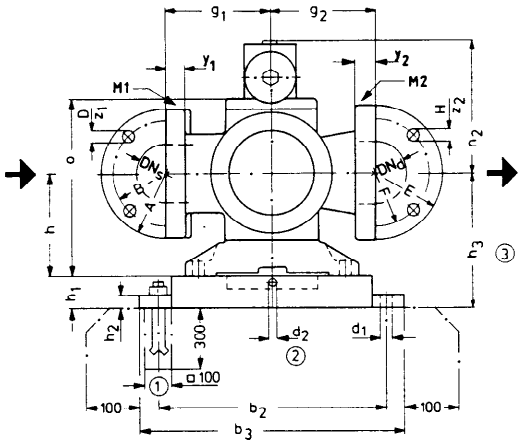

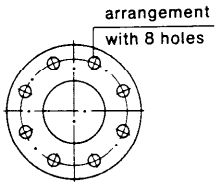

① Allocation of foundation screws to the base plate sizes see dimension table of the base plates.
② Leakage drain on base plate upon request only.
③ $h_3 = h$ or h_4 (use max. dimension) $+ h_1$.
④ h_4 — size of motor, e.g. 180 M — 180 mm.

Branch position:
Suction and delivery branch opposed out-of-line on centerline of pump. The sense of flow may be changed without alteration of sense of rotation by turning the pump casing by 180°.

Sense of rotation:
clockwise seen from drive side

pump size SMH	connections drainage B1/B2	venting E3/E4	pressure gauge M1/M2
40	G 1/4	G 1/4	G 1/4
80	G 1/4	G 1/4	G 1/4
120	G 3/8	G 3/8	G 1/4
210	G 1/2	G 1/2	G 1/4
280	G 3/4	G 3/4	G 1/2
440	G 3/4	G 3/4	G 1/2
660	G 3/4	G 3/4	G 1/2
940	G 3/4	G 3/4	G 1/2
1300	G 3/4	G 3/4	G 1/2

Valve dimensions and connections:
with built-on pump type see dimension leaflet VM 618 GB/...2005, page 27
for pipeline installation see dimension leaflet VM 618 GB/...2006, page 28
Additional dimensions in case of heating see dimension leaflet VM 618 GB/...2004, page 26

Dimensions in mm
Alteration of dimensions reserved

z_1/z_2 = No. of holes

pump size	pump dimensions h	k_2	⑤ n_2	o	p_2	w	suction flange PN 16 DIN EN 1092-2, form B nom. diam. DN_s	A	B	D	g_1	y_1	z_1	delivery flange PN 100 DIN 2547, form B nom. diam. DN_d	E	F	H	g_2	y_2	z_2
40	118	464	175	204	214	65	32	140	100	19	110	18	4	25	140	100	18	110	24	4
80	140	548	192	248	259	130	65	185	145	19	125	20	4	40	170	125	23	125	26	4
120	150	613	202	268	253	100	65	185	145	19	140	20	4	50	195	145	27	140	28	4
210	160	724	212	288	336	120	80	200	160	19	155	22	8	65	220	170	27	155	30	8
280	190	777	247	334	375	150	100	220	180	19	195	24	8	80	230	180	27	195	32	8
440	200	893	256	354	436	200	125	250	210	19	200	26	8	100	265	210	30	200	36	8
660	215	1025	307	384	475	170	125	250	210	19	200	26	8	100	265	210	30	200	36	8
940	225	1154	317	404	623	230	150	285	240	23	220	26	8	125	315	250	33	220	40	8
1300	250	1230	387	462	675	240	150	285	240	23	240	26	8	125	315	250	33	240	40	8

⑤ max. dimension with by-pass valve, may be smaller each acc. to valve type. For return valves see dimension leaflet VM 618 GB/...2005, page 27

base plate size Gr.	base plate dimensions b_2	b_3	d_1	② d_2	h_1	h_2	l_1	l_2	l_5	foundation screws allocation ea.	dimension
5	335	379	18,5	G 3/8	50	30	725	500	112	4	M 16 x 160
6	375	419	18,5	G 3/8	50	30	815	560	127	4	M 16 x 160
7.1	320	350	14,5	G 1/2	70	6	900	630	135	4	M 12 x 160
8.1	400	430	14,5	G 1/2	72	6	900	630	135	4	M 12 x 160
9.1	445	485	18,5	G 1/2	87	7	1000	710	145	4	M 16 x 250

base plate size Gr.	base plate dimensions b_2	b_3	d_1	② d_2	h_1	h_2	l_1	l_2	l_3	l_4	l_5	foundation screws allocation ea.	dimension
10.1	470	510	18,5	G 1/2	87	7	1120	900	450	-	110	6	M 16 x 250
11.1	520	560	18,5	G 1/2	90	7	1250	1190	595	-	30	6	M 16 x 250
11.4	595	635	18,5	G 1/2	90	7	1250	1190	595	-	30	6	M 16 x 250
12.1	575	615	18,5	G 3/4	115	8	1400	1340	-	440	30	8	M 16 x 250
12.3	645	685	18,5	G 3/4	115	8	1400	1340	-	440	30	8	M 16 x 250
13.1	575	615	18,5	G 3/4	115	8	1600	1540	-	500	30	8	M 16 x 250
14.1	675	715	18,5	G 3/4	115	8	1600	1540	-	500	30	8	M 16 x 250
16.3	675	715	18,5	G 3/4	115	8	1800	1740	-	580	30	8	M 16 x 250

② leakage drain on base plate upon request only.

motor size ⑥	90 S			90 L			100 L			112 M			132 S			132 M			160 M			160 L		
k_5 approx.	310			335			385			415			475			515			625			670		
kW at = 750 1/min	-			-			0,75/1,1			1,5			2,2			3,0			4,0/5,5			7,5		
kW at = 1000 1/min	0,75			1,1			1,5			2,2			3,0			4,0/5,5			7,5			11,0		
kW at = 1500 1/min	1,1			1,5			2,2/3,0			4,0			5,5			7,5			11,0			15,0		
kW at = 3000 1/min	1,5			2,2			3,0			4,0			5,5/7,5			-			11,0/15,0			18,5		
	required base plate and coupling/dimension x_V																							
pump size	x_V	Gr	Ku	x_V	Gr	Ku	x_V	Gr	Ku	x_V	Gr	Ku	x_V	Gr	Ku	x_V	Gr	Ku	x_V	Gr	Ku	x_V	Gr	Ku
SMH 40	25 V	5	24	25 V	5	24	25 V	5	28	25 V	5	28	10 V	6	38	10 V	6	38	40 V	9.1	42	40 V	9.1	42
SMH 80	-	-	-	-	-	-	50 V	7.1	28	50 V	7.1	28	50 V	7.1	38	50 V	7.1	38	25 V	9.1	42	25 V	9.1	42
SMH 120	-	-	-	-	-	-	-	-	-	10 V	7.1	28	10 V	8.1	38	10 V	8.1	38	40 V	10.1	42	40 V	10.1	42
SMH 210	-	-	-	-	-	-	-	-	-	-	-	-	20 V	9.1	38	20 V	9.1	38	50 V	10.1	42	50 V	10.1	42
SMH 280	-	-	-	-	-	-	-	-	-	-	-	-	-	-	-	-	-	-	100 V	10.1	42	100 V	10.1	42
SMH 440	-	-	-	-	-	-	-	-	-	-	-	-	-	-	-	-	-	-	240 V	11.1	42	240 V	11.1	42

motor size ⑥	180 M			180 L			200 L			225 S			225 M						250 M					
k_5 approx.	700			730			790			830			875						960					
kW at = 750 1/min	-			11,0			15,0			18,5			22,0			-			30,0			-		
kW at = 1000 1/min	-			15,0			18,5/22,0			-			30,0			-			37,0			-		
kW at = 1500 1/min	18,5			22,0			30,0			37,0			45,0			-			55,0			-		
kW at = 3000 1/min	22,0			-			30,0/37,0			-			-			45,0			-			55,0		
	required base plate and coupling/dimension x_V																							
pump size	x_V	Gr	Ku	x_V	Gr	Ku	x_V	Gr	Ku	x_V	Gr	Ku	x_V	Gr	Ku	x_V	Gr	Ku	x_V	Gr	Ku	x_V	Gr	Ku
SMH 40	30 V	9.1	48	-	-	-	-	-	-	-	-	-	-	-	-	-	-	-	-	-	-	-	-	-
SMH 80	60 V	10.1	48	60 V	10.1	48	100 V	10.1	55	-	-	-	-	-	-	-	-	-	-	-	-	-	-	-
SMH 120	40 V	10.1	48	40 V	10.1	48	140 V	11.1	55	-	-	-	-	-	-	140 V	11.1	55	-	-	-	140 V	11.4	60
SMH 210	50 V	10.1	48	50 V	10.1	48	190 V	11.1	55	170 V	11.1	60	170 V	11.1	60	170 V	11.1	55	-	-	-	150 V	12.1	60
SMH 280	230 V	11.1	48	230 V	11.1	48	210 V	11.1	55	200 V	11.1	60	230 V	11.1	60	230 V	11.1	55	230 V	12.1	65	230 V	12.1	60
SMH 440	210 V	11.1	48	210 V	11.1	48	280 V	12.1	55	260 V	12.1	60	260 V	12.1	60	260 V	12.1	55	215 V	12.1	65	215 V	12.1	60
SMH 660	240 V	12.1	48	240 V	12.1	48	220 V	12.1	55	290 V	13.1	60	290 V	13.1	60	290 V	13.1	55	260 V	13.1	65	260 V	13.1	60
SMH 940	-	-	-	270 V	12.1	48	240 V	12.1	55	330 V	13.1	60	330 V	13.1	60	330 V	13.1	55	300 V	13.1	65	300 V	13.1	60
SMH 1300	-	-	-	-	-	-	360 V	13.1	55	340 V	13.1	60	340 V	13.1	60	340 V	13.1	55	300 V	13.1	65	300 V	13.1	60

motor size ⑥	280 S						280 M						315 S						315 M					
k_5 approx.	1020						1064						1130						1200					
kW at = 750 1/min	37,0			-			45,0			-			55,0			-			75,0			-		
kW at = 1000 1/min	45,0			-			55,0			-			75,0			-			90,0			-		
kW at = 1500 1/min	75,0			-			90,0			-			110,0			-			132,0			-		
kW at = 3000 1/min	-			75,0			-			90,0			-			110,0			-			132,0		
	required base plate and coupling/dimension x_V																							
pump size	x_V	Gr	Ku	x_V	Gr	Ku	x_V	Gr	Ku	x_V	Gr	Ku	x_V	Gr	Ku	x_V	Gr	Ku	x_V	Gr	Ku	x_V	Gr	Ku
SMH 210	-	-	-	150 V	12.3	65	-	-	-	150 V	12.3	65	-	-	-	-	-	-	-	-	-	-	-	-
SMH 280	-	-	-	290 V	14.1	65	-	-	-	300 V	14.1	65	-	-	-	230 V	14.1	65	-	-	-	-	-	-
SMH 440	280 V	14.1	75	280 V	14.1	65	280 V	14.1	75	280 V	14.1	65	-	-	-	230 V	14.1	65	-	-	-	230 V	14.1	75
SMH 660	230 V	14.1	75	230 V	14.1	65	200 V	14.1	75	200 V	14.1	65	290 V	16.3	85	290 V	16.3	65	290 V	16.3	85	290 V	16.3	75
SMH 940	250 V	14.1	75	250 V	14.1	65	240 V	14.1	75	240 V	14.1	65	310 V	16.3	85	310 V	16.3	65	300 V	16.3	85	300 V	16.3	75
SMH 1300	370 V	16.3	75	370 V	16.3	65	350 V	16.3	75	350 V	16.3	65	320 V	16.3	85	320 V	16.3	65	295 V	16.3	85	295 V	16.3	75

Gr = base plate size up to 6 of cast iron, from 7.1 onwards of fabricated steel
Ku = coupling size Polynorm A

⑦ Three-phase A.C. standard motors construction IM B3 and enclosure higher than IP 23. In case of three-phase A.C. standard motors with enclosure IP 23 as well as motor sizes above 315 M and D.C. motors dimensions of base plate and coupling upon request.
⑧ upon request.

Subject to technical alterations.

The mentioned performance data are to be considered as a product and performance abstract only. The particular operating limits can be taken from the quotation or order acknowledgement.

ALLWEILER
A Member of the
COLFAX PUMP GROUP

ALLWEILER AG · Werk Radolfzell
Postfach 1140 · 78301 Radolfzell
Allweilerstraße 1 · 78315 Radolfzell
Germany
Tel. +49 (0)7732 86-0
Fax +49 (0)7732 86-436
E-mail: service@allweiler.de
Internet: http://www.allweiler.com

VM 618 GB / 02.00 – Ident No. 795 684